EL-SUN
SYSTEMY MONTAŻOWE
FOTOWOLTAIKA

CATALOGUE 2021/22

MOUNTING CONSTRUCTIONS FOR PHOTOVOLTAIC PANELS

TABLE OF CONTENTS

Certificates 3

1 PHOTOVOLTAIC CONSTRUCTIONS FOR SLOPING ROOFS 6
Construction for ceramic tiles cladded roofs 7
Construction for tile effect metal sheets cladded roofs 8
Installation system for seam metal roofing 9
Mounting system on the roof covered with trapezoidal sheet metal 10
Bitumen roof mounting system 11

2 PHOTOVOLTAIC CONSTRUCTIONS FOR FLAT ROOFS 12
Ballast construction for east/west membrane 13
Ballast construction for 15 degree membrane 14
Mounting structure on small triangles fastened with screws (horizontal) 15
Mounting structure on big triangles fastened with screws (vertical) 16
Mounting system for ballasted triangles (horizontal) 17
Mounting system for ballasted triangles (vertical) 18
Welded system for flat roofs (triangles) 19
Welded system for flat roof (supports) 20
Flat-roof welding system for membrane/roofing felt 21

3 GROUND PHOTOVOLTAIC CONSTRUCTIONS 22
Single-supported soil structure 23
Soil construction for mounting two panels vertically 24
Ground construction for mounting three panels horizontally 25
Ground construction for mounting four panels horizontally 26

4 PHOTOVOLTAIC CONSTRUCTION COMPONENTS 27
Screws, nuts, grooves 28
End clamp 31
Middle clamp 32
Rust-proof adapter 33
Doubly adjustable rafter hook 34
L-shaped hook 35
L-shaped hook adjustable 36
ZL-shaped hook 37
ZL-shaped hook adjustable 38
S-shaped hook 39
40x40 mm mounting profile 40
Trapezoidal rail lift 41
C120 connector 42
Large screw-on triangle wind zone I 43
Small screw-on triangle 44
Angle bar with holes 45
Plate mounted under roofing felt/membrane 46
Profile for ballast structure 47
Rubber pad under the ballast 48
Rubber pad under the profile 49
Sheet for ballast structure 50
Front support for ballast construction 51
Back mounting bracket 52
Back mounting bracket east/west 53
Ground strut 54
Small hammer-in bracket 55
Large driven bracket 56
Strengthened profile 80x40 57
Mallet SDS MAX 58
Earth connection 59
Galvanized earth electrode 60

5 CAR PORT 61
Car port – concepts 62
Notes..... 63

CERTIFICATES

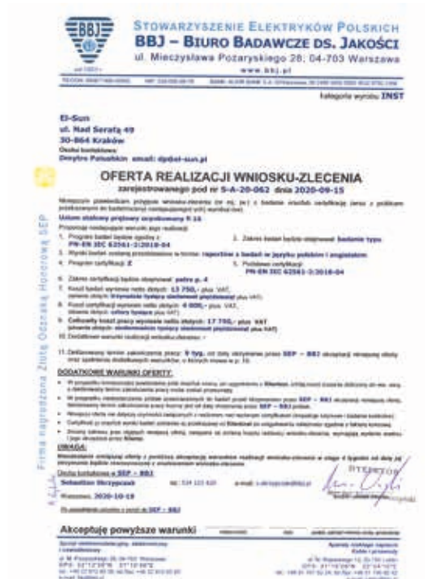

Solar panels take energy from solar radiation that is later turned into electric power used to power household devices. This is an ecological and economical solution for heating up potable water or supporting central heating installation. Due to several possible options to locate solar panels, there exists a need to install them using special constructions.

INSTALLATION METHOD

GROUND COLLECTORS

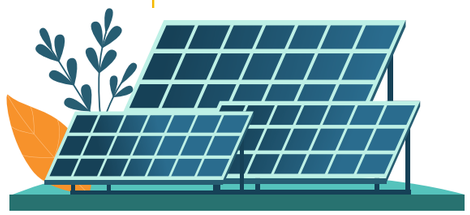

ROOF COLLECTORS

FREE-STANDING CONSTRUCTIONS

Solar panels frames installed on the ground are built similarly to those intended for roofs, with the exception that they are set on the territory of the plot. This solution is the best for large acreage plots. **Here, the solar collectors performance will be high, as they can be set in the sunniest place directed south.**

SLOPING ROOF

The most popular system of photovoltaic installation is mounting them on a sloping roof. **This is the cheapest method, as they can be installed quickly and easily. These types of frames use the natural angle of the roof.** Some tiles are removed to install special hooks on the roof rafter using proper mounting screws. Individual tiles may require additional grinding. Profiles are attached to hooks and subsequently they are equipped with sliding projections, to which clamps are attached. Such a prepared construction allows solar panels to be mounted. With metal sheets hooks must be attached by drilling through the metal sheets. Due to this a gasket is applied to the place where the screw goes through the hole in the metal sheet. There also exist methods of installing photovoltaic constructions on roofs with plane tiles, standing seam metal sheets, and shingle. Each of them requires a slightly different approach. Solar panel frames are recommended for sloping roofs facing south, east or west. However, they are not effective on roofs facing north.

FLAT ROOF

Installation of photovoltaic constructions on flat roofs requires that frames increasing the roof slope angle are used. The angle should be between 15 and 45 percent. These are special mounting triangles, the position of which must be carefully planned in order to eliminate the risk of shade on the solar panels. Once the tringles are fixed to the roof with bolts, profiles are installed, to which clamps and sliding outlets are screwed in. Onto such prepared system solar modules can be put. **Although, photovoltaic constructions for flat roofs are more expensive, a possibility to arrange them on the roof as desired and directing them directly towards south makes solar panels much more effective.**

The El-Sun company offers professional constructions to be used with solar panels that can be installed on every type of roof and ground. Our PV mounting constructions are characterized by stability, high quality and endurance, and long service life. All components meet the required standards and allow that all necessary cables can be placed in them seamlessly. Individual details are made of an enduring aluminium or stainless steel. The entire construction possesses a really aesthetic and attractive look. This is a modern, innovative, and ecological system of taking and generating energy and the costs of its production will start to pay off very quickly.

The El-Sun company employees are professionals who are extremely devoted to their duties. They are specialists who possess many years of experience in assembling photovoltaic systems. We have all necessary accessories, tools, and equipment for mounting frames. Every order is given separate attention, for this reason we offer professional consultancy regarding selection of construction and photovoltaic panels, and precise analysis of the client's expectations in the first place. Further, based on these guidelines we choose an appropriate system together with the client. We transport individual frame components used in photovoltaic systems to the place of destination and assemble them. This process is conducted expeditiously and seamlessly. A reliable recommendation for our company is the large number of satisfied clients who put their trust in us. With us you can be certain that the service is performed reliably and as scheduled.

Use what the nature offers you.
Generate electricity on your own!

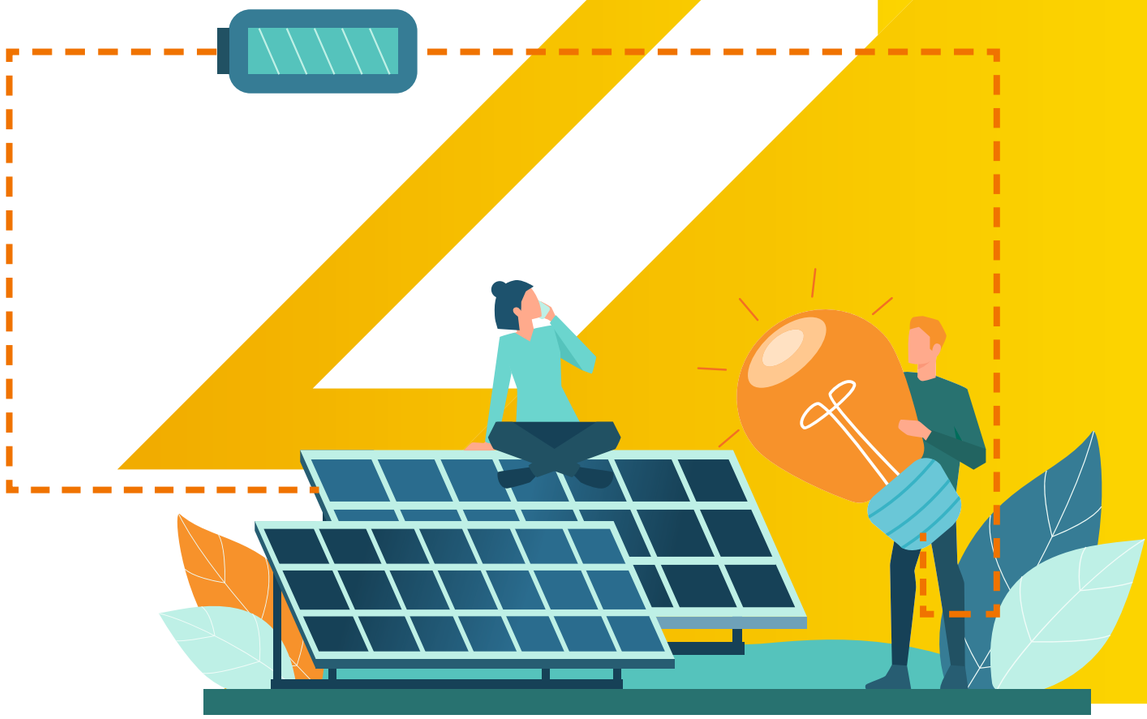

1

Photovoltaic constructions for sloping roofs

CONSTRUCTION FOR CERAMIC TILES CLADDED ROOFS

Mark	NAME	MATERIAL
A	END CLAMP	Al
B	ALLEN KEY SCREW	A2
C	ALUMINUM KEYWAY	Al
D	40X40 MM MOUNTING PROFILE	Al
E	HEX SCREW	A2
F	FLANGE NUT	A2
G	FURNITURE SCREW	A2
H	DOUBLY ADJUSTABLE RAFTER HOOK	A2
I	TCS CREW	A2
J	MIDDLE CLAMP	Al

It is possible to prepare components for an individual order.

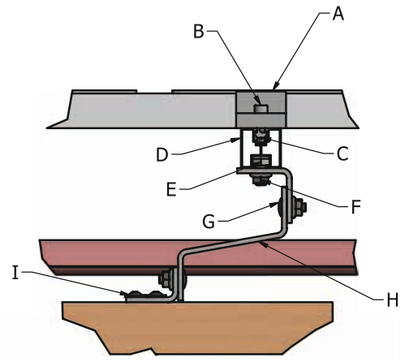

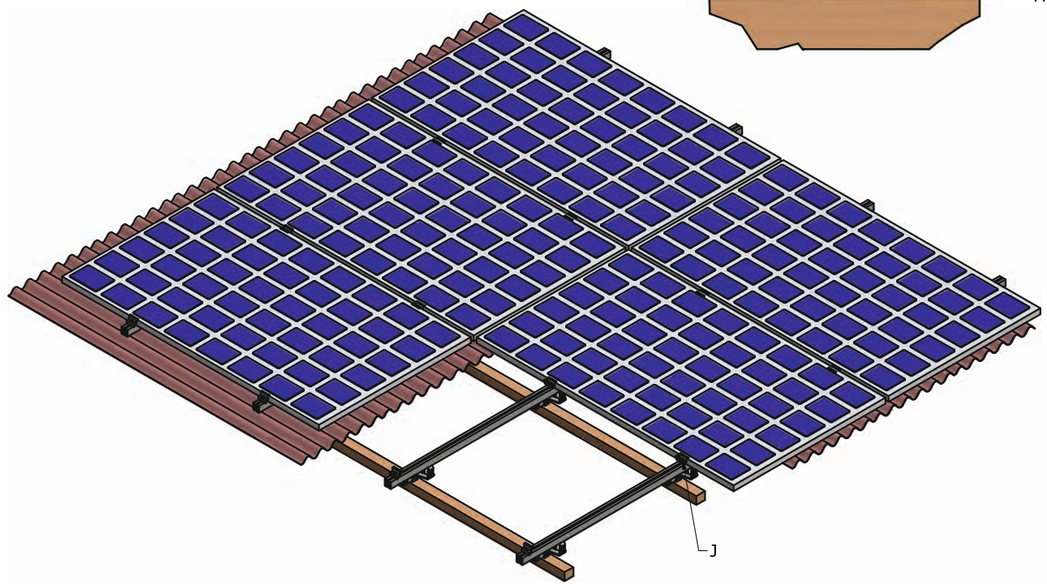

CONSTRUCTION FOR TILE EFFECT METAL SHEETS CLADDED ROOFS

Mark	NAME	MATERIAL
A	END CLAMP	Al
B	ALLEN KEY SCREW	A2
C	ALUMINUM KEYWAY	Al
D	DUAL THREAD SCREW	A2
E	RUST-PROOF ADAPTER	A2
F	HEX SCREW	A2
G	FLANGE NUT	A2
H	40X40 MM MOUNTING PROFILE	Al
I	MIDDLE CLAMP	Al

It is possible to prepare components for an individual order.

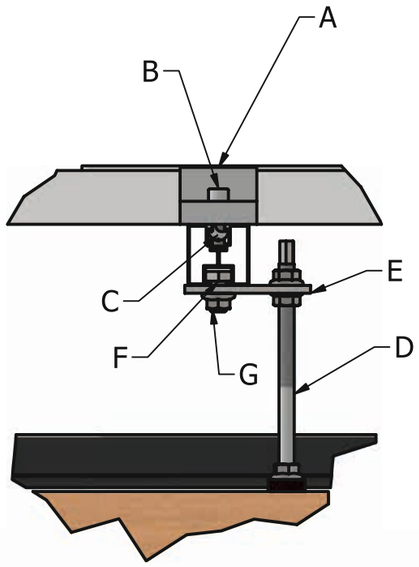

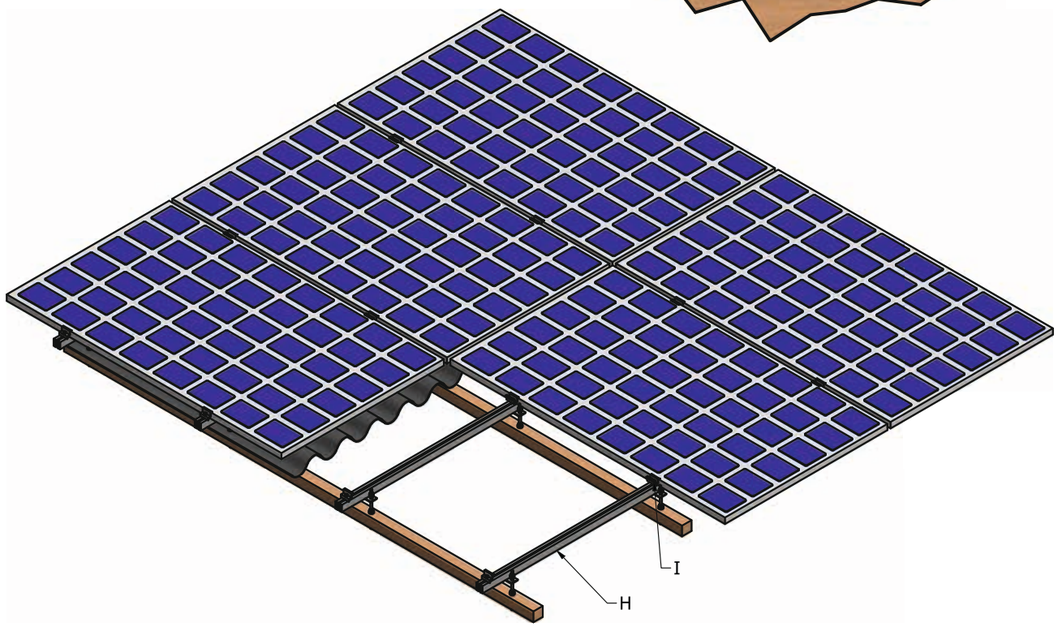

INSTALLATION SYSTEM FOR SEAM METAL ROOFING

Mark	NAME	MATERIAL
A	END CLAMP	Al
B	ALLEN KEY SCREW	A2
C	ALUMINUM KEYWAY	Al
D	40X40 MM MOUNTING PROFILE	Al
E	FURNITURE SCREW	A2
F	HEX SCREW	A2
G	FLANGE NUT	A2
H	SEAM HOLDER	A2
I	MIDDLE CLAMP	Al

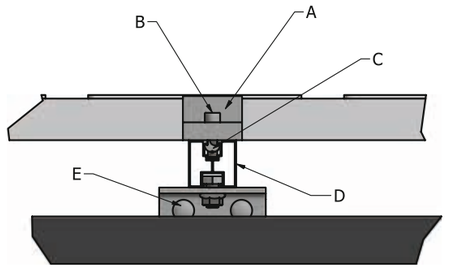

It is possible to prepare components for an individual order.

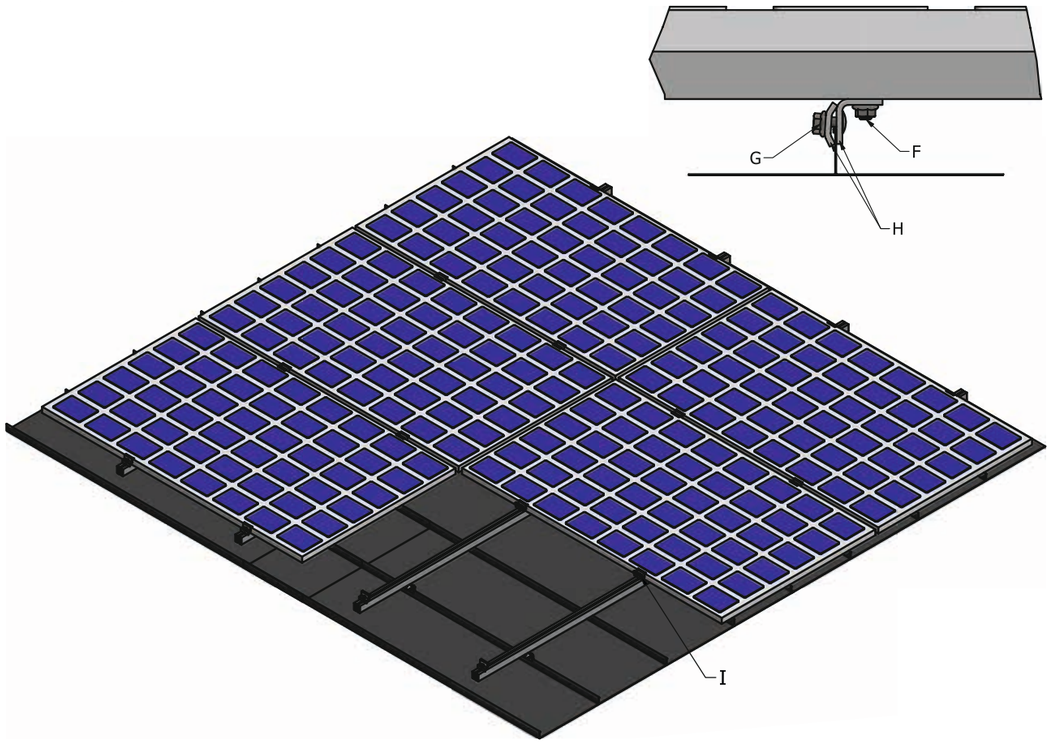

MOUNTING SYSTEM ON THE ROOF COVERED WITH TRAPEZOIDAL SHEET METAL

Mark	NAME	MATERIAL
A	END CLAMP	Al
B	ALLEN KEY SCREW	A2
C	ALUMINUM KEYWAY	Al
D	TRAPEZOIDAL RAIL LIFT	Al
E	BI-METAL SCREW	A2
F	MIDDLE CLAMP	Al

It is possible to prepare components for an individual order.

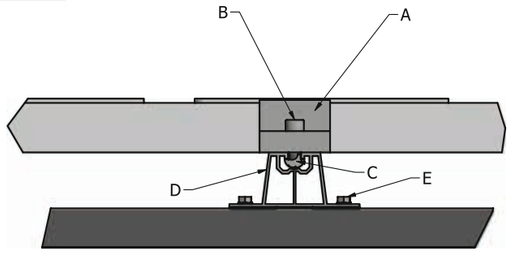

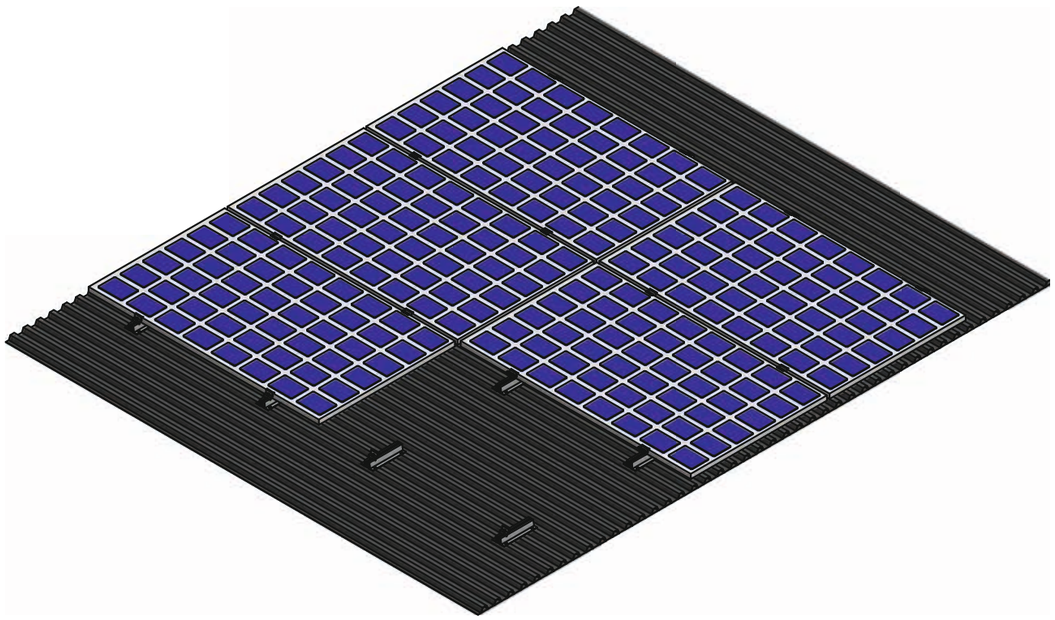

BITUMEN ROOF MOUNTING SYSTEM

Mark	NAME	MATERIAL
A	END CLAMP	Al
B	ALLEN KEY SCREW	A2
C	ALUMINUM KEYWAY	Al
D	40X40 MM MOUNTING PROFILE	Al
E	L-SHAPED HOOK	A2
F	TCS CREW	A2

It is possible to prepare components for an individual order.

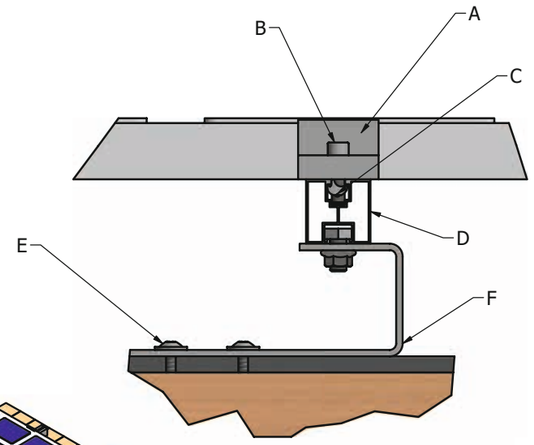

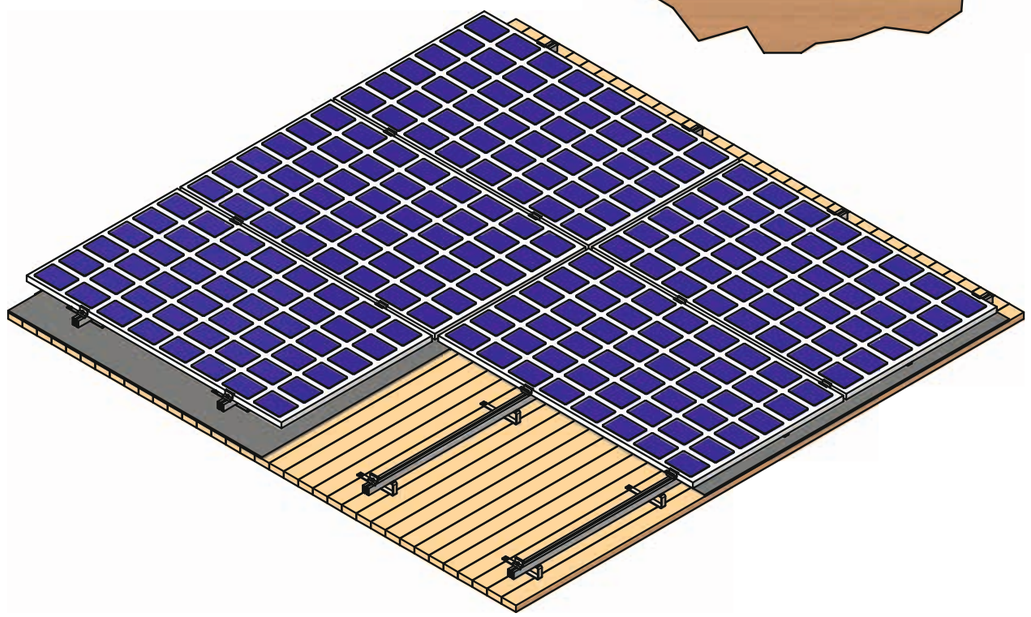

2

Photovoltaic constructions for flat roofs

BALLAST CONSTRUCTION FOR EAST/WEST MEMBRANE

Mark	NAME	MATERIAL
A	END CLAMP	Al
B	ALLEN KEY SCREW	A2
C	HEX SCREW	A2
D	FLANGE NUT	A2
E	TRAPEZOIDAL RAIL LIFT	Al
F	GUM	Gum
G	FRONT MOUNTING BRACKET	Al
H	SHEET METAL FOR BALLAST	Al
I	EAST/WEAST MOUNTING BRACKET	Al
J	BALLAST BLOCK	-
K	MIDDLE CLAMP	Al

Note:
Horizontal mounting only.

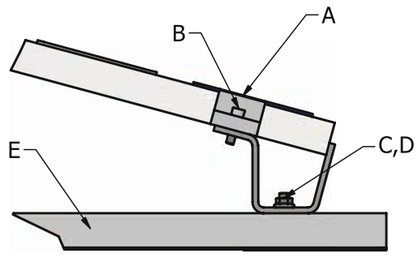

It is possible to prepare components for an individual order.

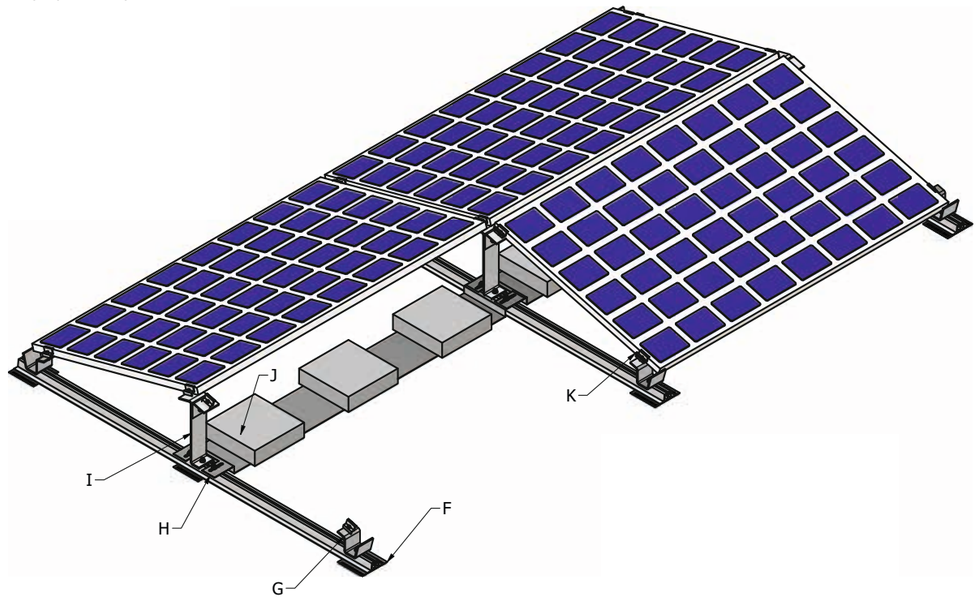

BALLAST CONSTRUCTION FOR 15 DEGREE MEMBRANE

Mark	NAME	MATERIAL
A	END CLAMP	Al
B	ALLEN KEY SCREW	A2
C	HEX SCREW	A2
D	FLANGE NUT	A2
E	TRAPEZOIDAL RAIL LIFT	Al
F	GUM	Gum
G	BALLAST BLOCK	-
H	BLACHA	A2
I	MIDDLE CLAMP	Al

It is possible to prepare components for an individual order.

Note:
Horizontal mounting only.

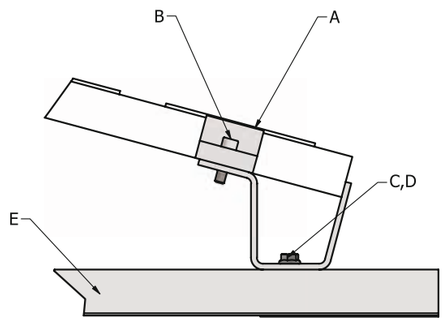

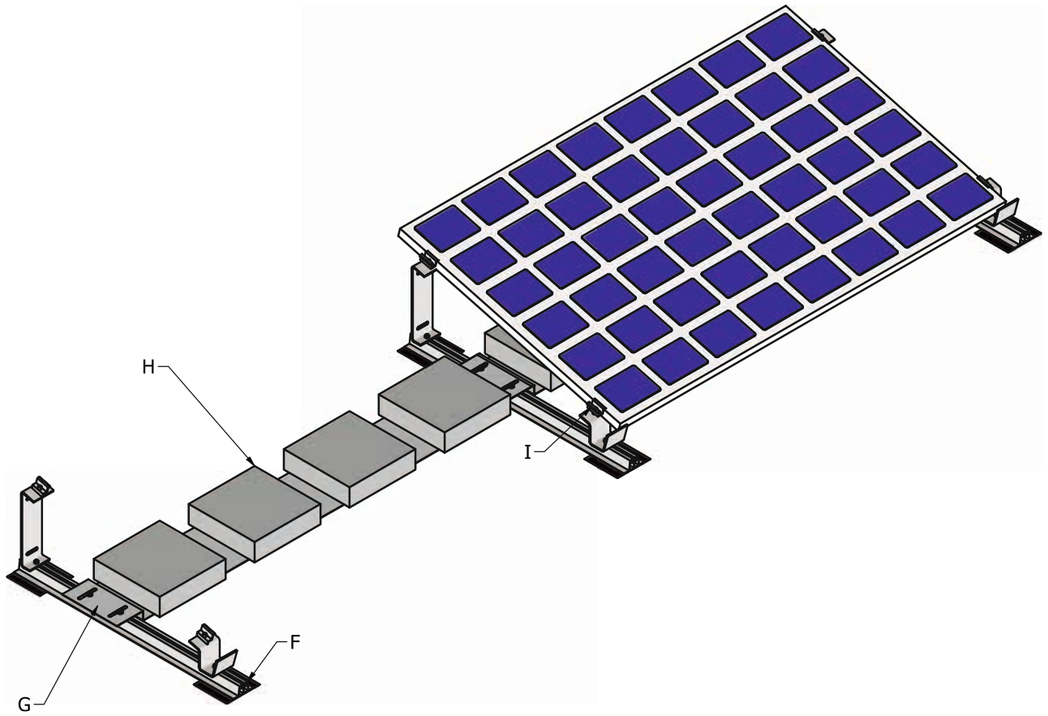

MOUNTING STRUCTURE ON SMALL TRIANGLES FASTENED WITH SCREWS (HORIZONTAL)

Mark	NAME	MATERIAL
A	END CLAMP	Al
B	ALLEN KEY SCREW	A2
C	INLET AL	Al
D	40X40 MM MOUNTING PROFILE	Al
E	HEX SCREW	A2
F	FLANGE NUT	A2
G	DUAL THREAD SCREW	A2
H	SCREW-ON TRIANGLE	Al
I	MIDDLE CLAMP	Al

It is possible to prepare components for an individual order.

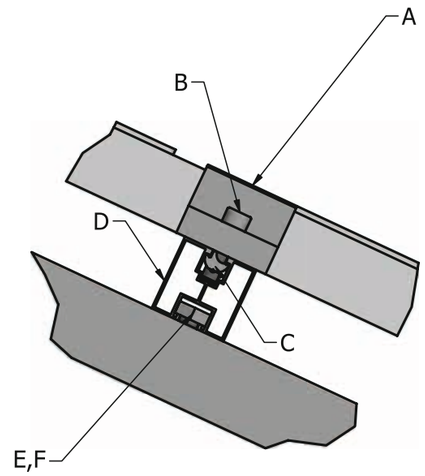

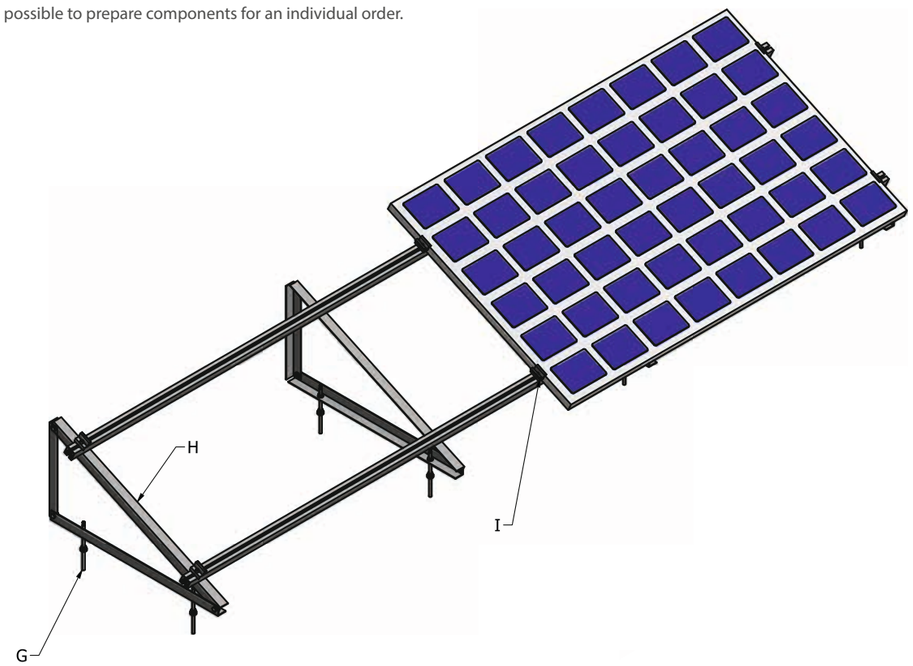

MOUNTING STRUCTURE ON BIG TRIANGLES FASTENED WITH SCREWS (VERTICAL)

Mark	NAME	MATERIAL
A	END CLAMP	Al
B	ALLEN KEY SCREW	A2
C	INLET AL	Al
D	40X40 MM MOUNTING PROFILE	Al
E	HEX SCREW	A2
F	HEX SCREW	A2
G	DUAL THREAD SCREW	A2
H	TRIANGLE	Al
I	MIDDLE CLAMP	Al

It is possible to prepare components for an individual order.

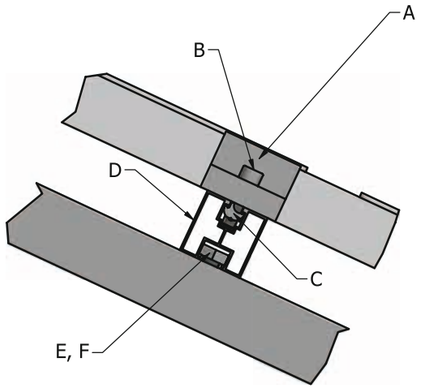

MOUNTING SYSTEM FOR BALLASTED TRIANGLES (HORIZONTAL)

Mark	NAME	MATERIAL
A	END CLAMP	Al
B	ALLEN KEY SCREW	A2
C	INLET AL	Al
D	40X40 MM MOUNTING PROFILE	Al
E	HEX SCREW	A2
F	FLANGE NUT M10	A2
G	MIDDLE CLAMP	Al
H	BALLAST BLOCK	-
I	CORNER BRACKET FOR BALLAST	Al
J	ANGLE BAR WITH HOLES	Al
K	TRIANGLE	Al
L	GUM	Gum

Note:*

The load per panel should be 40 kg in wind zone I and 60 kg in wind zones II and III.

*For structures located up to 300 m above sea level.

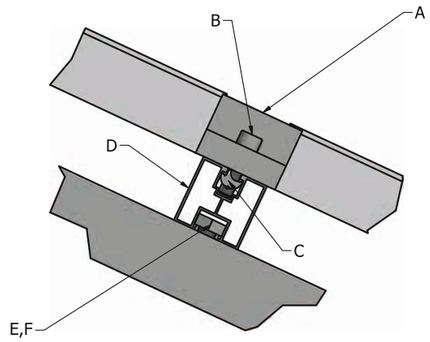

It is possible to prepare components for an individual order.

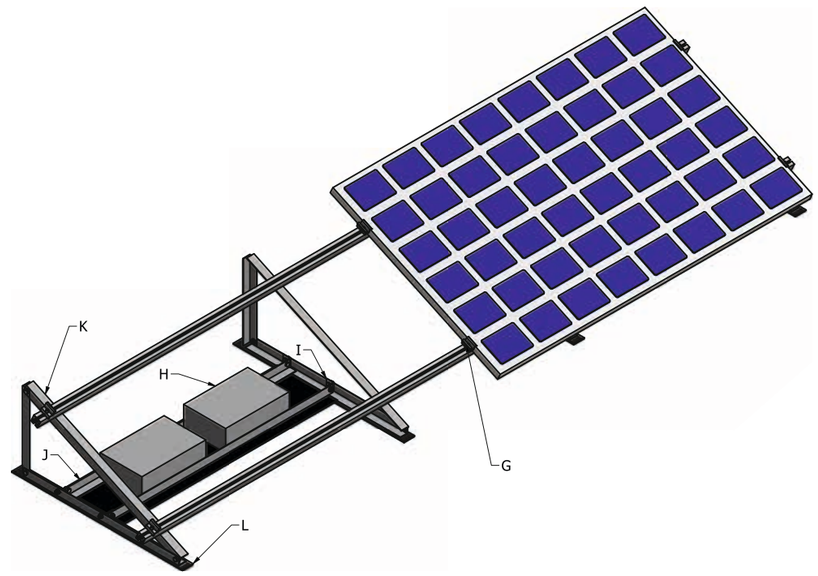

MOUNTING SYSTEM FOR BALLASTED TRIANGLES (VERTICAL)

Mark	NAME	MATERIAL
A	END CLAMP	Al
B	ALLEN KEY SCREW	A2
C	INLET AL	Al
D	40X40 MM MOUNTING PROFILE	Al
E	HEX SCREW	A2
F	FLANGE NUT M10	A2
G	MIDDLE CLAMP	Al
H	BALLAST BLOCK	-
I	CORNER BRACKET FOR BALLAST	Al
J	ANGLE BAR WITH HOLES	Al
K	TRIANGLE	Al
L	GUM	Gum

Note:*

The load per panel should be 65 kg in wind zone I and 80 kg in wind zones II and III.

*For structures located up to 300 m above sea level.

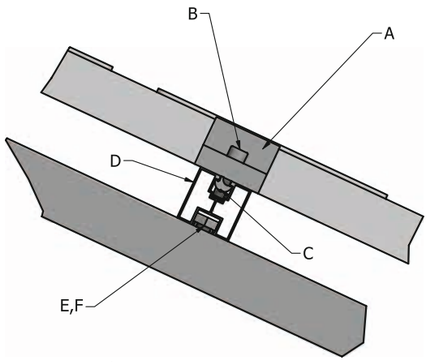

It is possible to prepare components for an individual order.

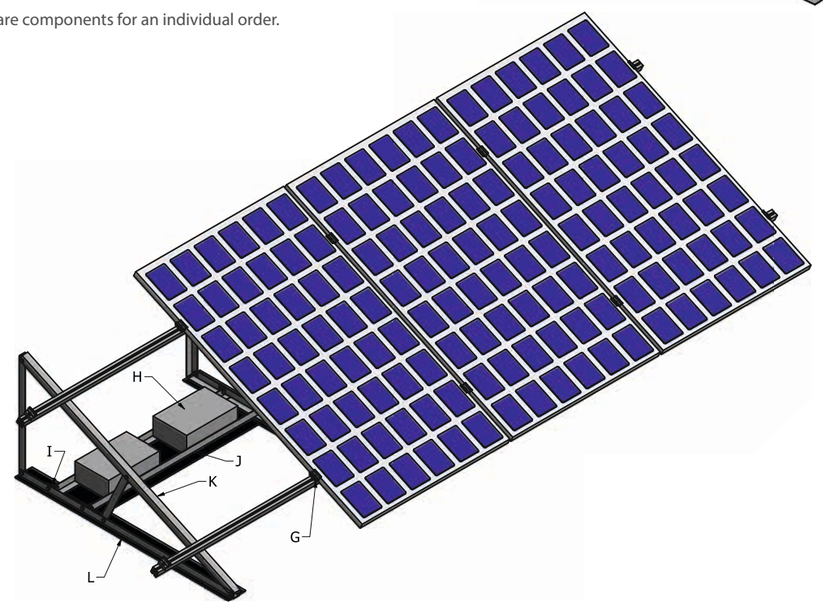

WELDED SYSTEM FOR FLAT ROOFS (TRIANGLES)

Mark	NAME	MATERIAL
A	END CLAMP	Al
B	ALLEN KEY SCREW	A2
C	INLET AL	Al
D	HEX SCREW	A2
E	FLANGE NUT	A2
F	UNDER-MEMBRANE MOUNTING PLATE	Galvanized steel
G	TRIANGLE	Al
H	MIDDLE CLAMP	Al
I	MEMBRANE	Membrane/ Papa
J	40X40 MM MOUNTING PROFILE	Al

Coverage of membranes PVC, FPO, PVC gr. min. 2mm (-5% / +10%)

Requirements for the membrane
Tensile strength min.
900N/5 mm PN-EN 12311-2
Tear strength
min. 150N PN-EN 12310-2
Shear strength at
Shear strength at joints min. 500N/50mm PN-EN 12317-2
Peel strength on connections min. 150N/50mm PN-EN 12316-2”

Requirements for roofing felt
Longitudinal and transverse tensile strength min. 300N/50 mm PN-EN 12311-1
Tear strength min. 150N PN-EN 12310-1
Shear strength at longitudinal and transverse joints min. 500N/50 mm PN-EN 12317-1
Peel strength min. 125N/50mm PN-EN 12316-1

Stone wool roof insulation
Allowable compressive stress at 10% deformation CS(10) for compressive force up to 5kN min. 30kPa EN 826
Allowable compressive stress at 10% deformation CS(10) for compressive force up to 12kN min. 70kPa PN-EN 826

It is possible to prepare components for an individual order.

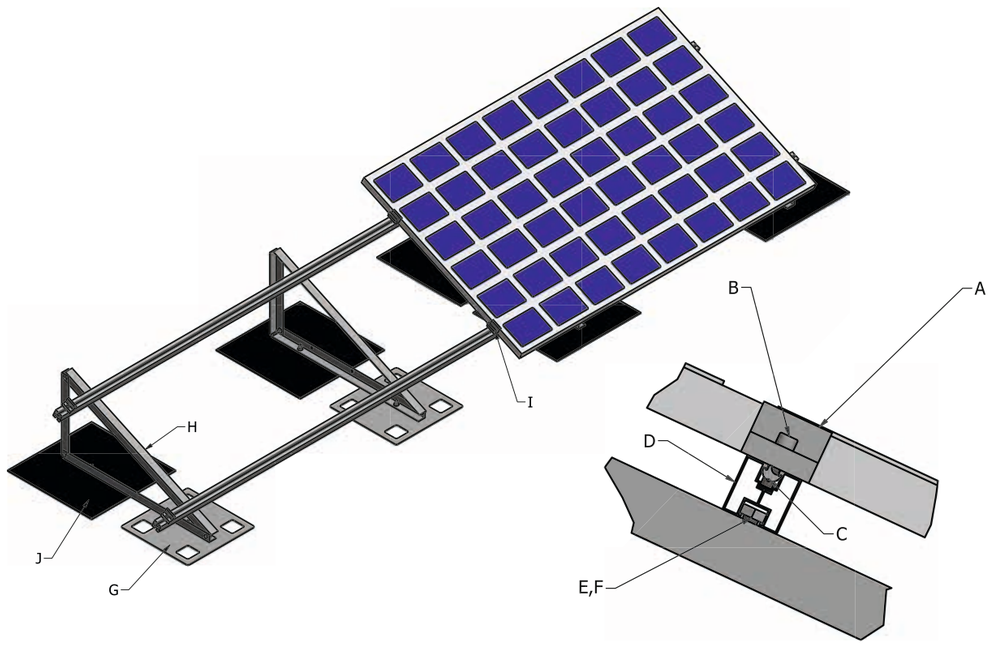

WELDED SYSTEM FOR FLAT ROOF (SUPPORTS)

Mark	NAME	MATERIAL
A	END CLAMP	Al
B	ALLEN KEY SCREW	A2
C	FLANGE NUT	A2
D	FRONT BRACKET	Al
E	BACK SUPPORT	Al
F	PLATE MOUNTED UNDER ROOFING FELT/ MEMBRANE	Galvanized steel
G	MIDDLE CLAMP	Al

It is possible to prepare components for an individual order.

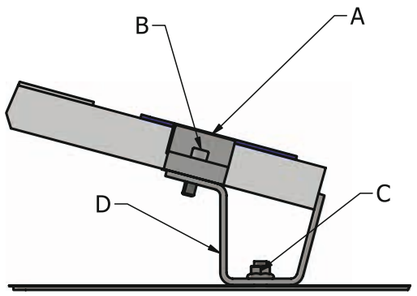

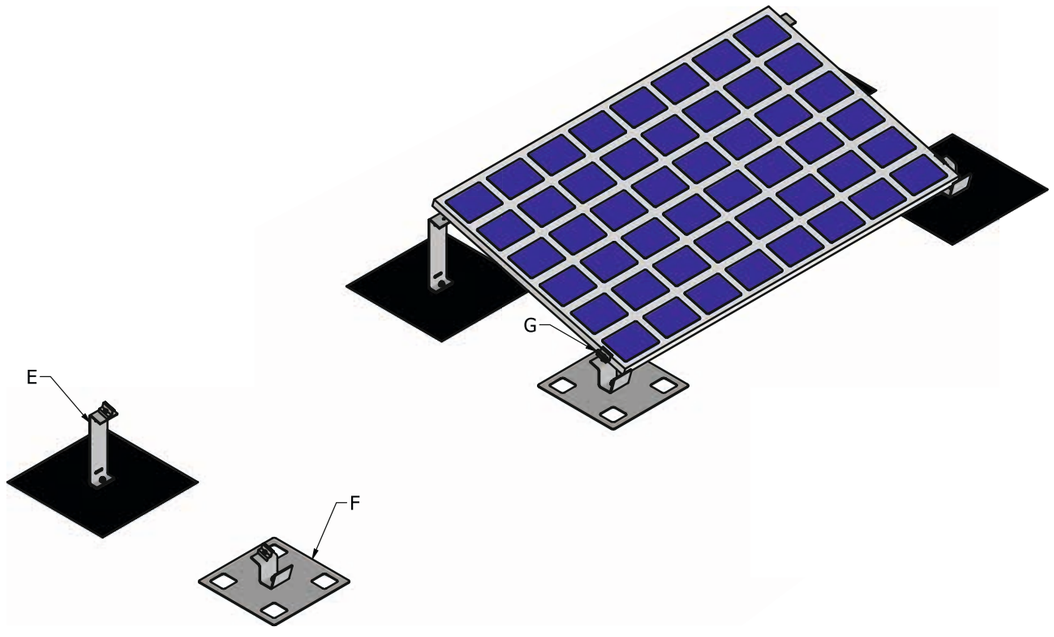

FLAT-ROOF WELDING SYSTEM FOR MEMBRANE/ROOFING FELT

Mark	NAME	MATERIAL
A	END CLAMP	Al
B	ALLEN KEY SCREW	A2
C	INLET AL	Al
D	40X40 MM MOUNTING PROFILE	Al
E	HEX SCREW	A2
F	FLANGE NUT	A2
G	MOUNTING PROFIIE	A2
H	MIDDLE CLAMP	Al

It is possible to prepare components for an individual order.

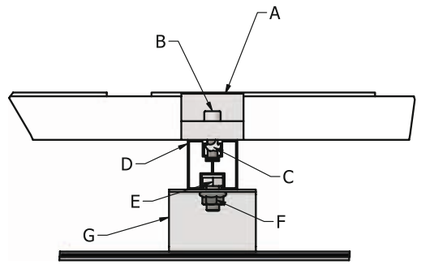

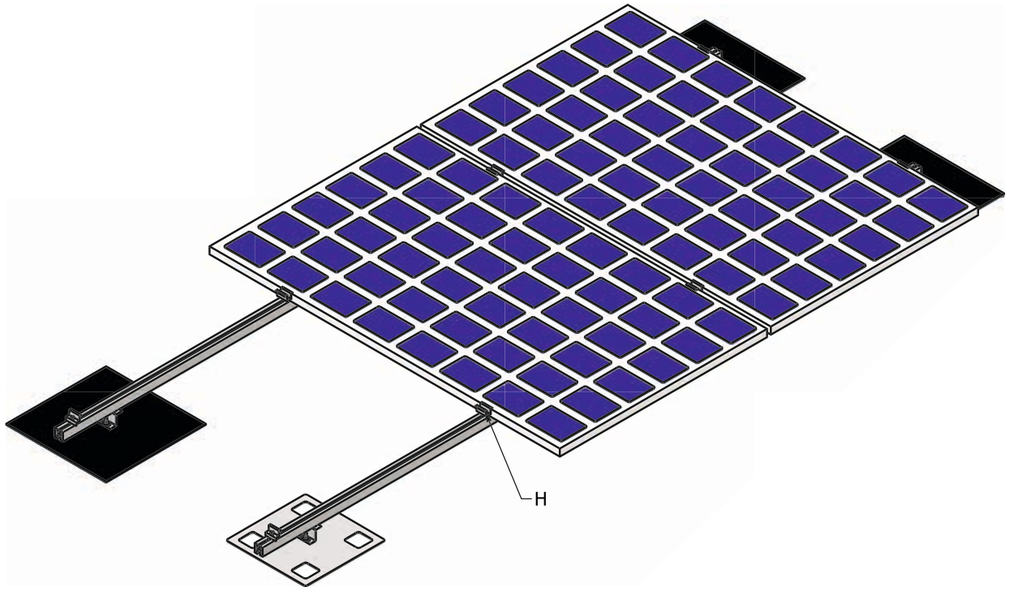

3

Ground photovoltaic constructions

SINGLE-SUPPORTED SOIL STRUCTURE

Mark	NAME	MATERIAL
A	END CLAMP	Al
B	ALLEN KEY SCREW	A2
C	INLET AL	Al
D	40X40 MM MOUNTING PROFILE	Al
E	HEX SCREW	A2
F	STRENGTHENED PROFILE 40X80	Al
G	STRUT 1,78 M	Galvanized steel
H	STRUT 1,22 M	Galvanized steel
I	DRIVEN BRACKET	Galvanized steel
J	STRUT 2,5 M	Galvanized steel
K	STAINLESS STEEL ANGLE	A2
L	FLANGE NUT M10	A2

It is possible to prepare components for an individual order.

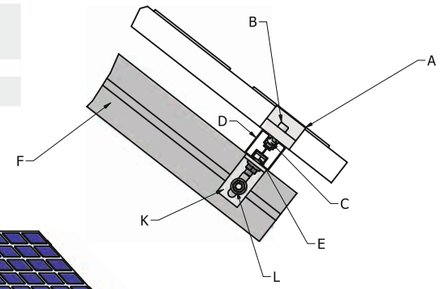

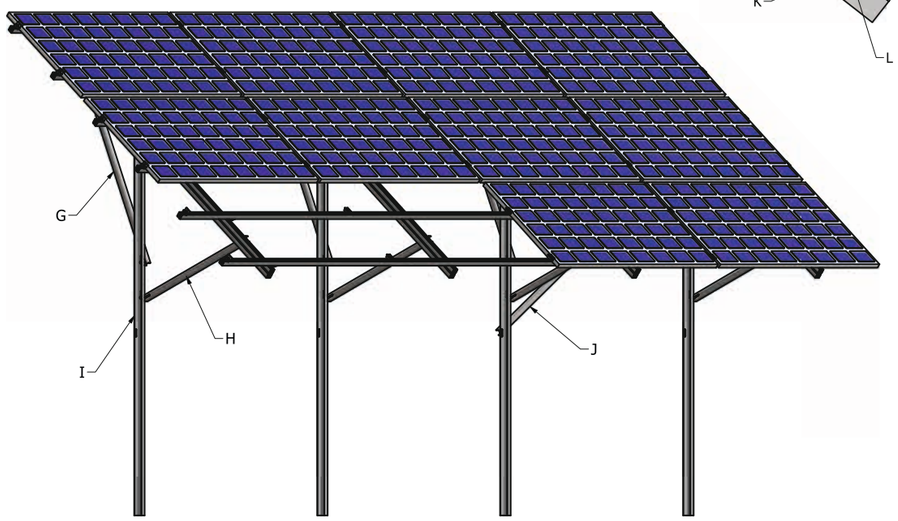

SOIL CONSTRUCTION FOR MOUNTING TWO PANELS VERTICALLY

Mark	NAME	MATERIAL
A	END CLAMP	Al
B	ALLEN KEY SCREW	A2
C	INLET AL	Al
D	40X40 MM MOUNTING PROFILE	Al
E	HEX SCREW	A2
F	STRENGTHENED PROFILE 40X80	Al
G	FLANGE NUT M10	A2
H	STAINLESS STEEL ANGLE	A2
I	SMALL HAMMER-IN BRACKET	Galvanized steel
J	STRUT 2,5 M	Galvanized steel
K	LARGE DRIVEN BRACKET	Galvanized steel
L	MIDDLE CLAMP	Al

It is possible to prepare components for an individual order.

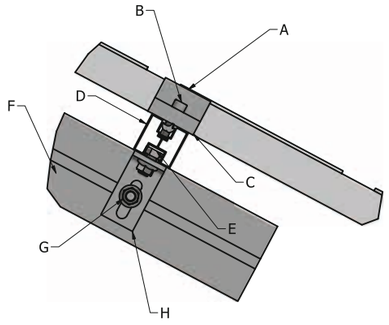

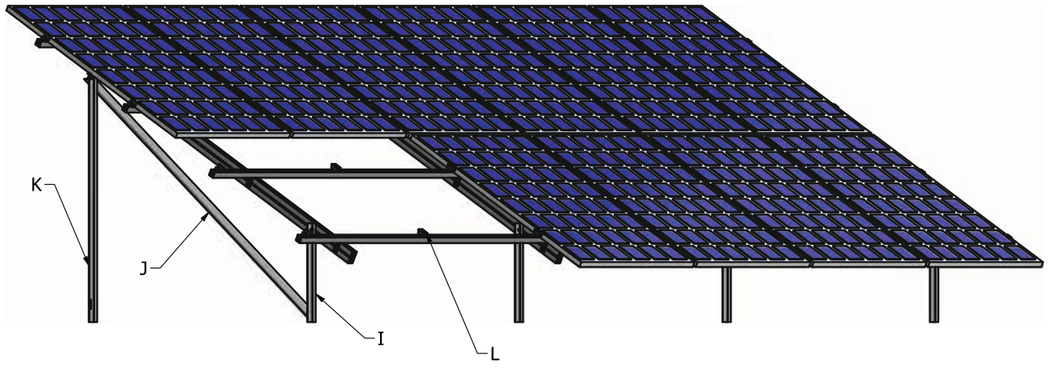

GROUND CONSTRUCTION FOR MOUNTING THREE PANELS HORIZONTALLY

Mark	NAME	MATERIAL
A	END CLAMP	Al
B	ALLEN KEY SCREW	A2
C	INLET AL	Al
D	40X40 MM MOUNTING PROFILE	Al
E	HEX SCREW	A2
F	STRENGTHENED PROFILE 40X80	Al
G	FLANGE NUT M10	A2
H	STAINLESS STEEL ANGLE	A2
I	SMALL HAMMER-IN BRACKET	Galvanized steel
J	STRUT 2,5 M	Galvanized steel
K	LARGE DRIVEN BRACKET	Galvanized steel
L	MIDDLE CLAMP	Al

It is possible to prepare components for an individual order.

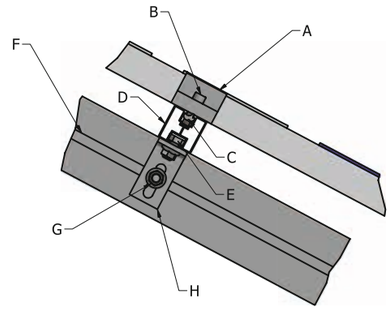

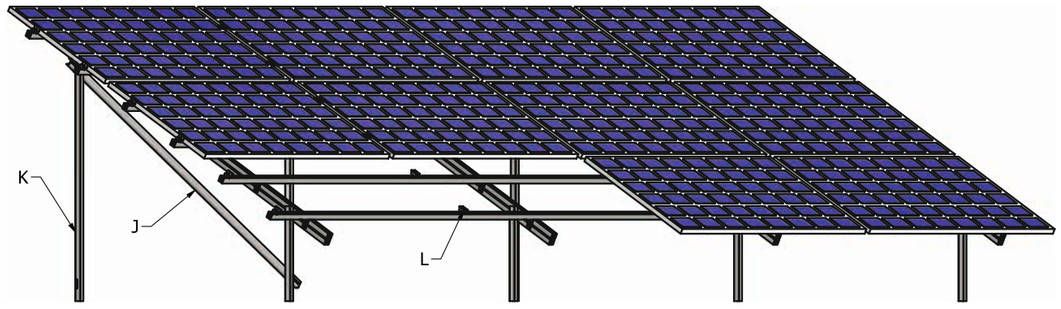

GROUND CONSTRUCTION FOR MOUNTING FOUR PANELS HORIZONTALLY

Mark	NAME	MATERIAL
A	END CLAMP	Al
B	ALLEN KEY SCREW	A2
C	INLET AL WITH BALL	Al
D	40X40 MM MOUNTING PROFILE	Al
E	HEX SCREW	A2
F	STRENGTHENED PROFILE 40X80	Al
G	FLANGE NUT M10	A2
H	STAINLESS STEEL ANGLE	A2
I	SMALL HAMMER-IN BRACKET	Galvanized steel
J	STRUT 2,5 M	Galvanized steel
K	LARGE DRIVEN BRACKET	Galvanized steel
L	MIDDLE CLAMP	Al

It is possible to prepare components for an individual order.

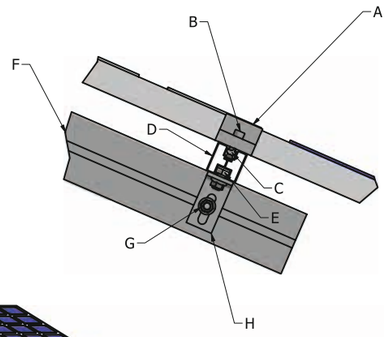

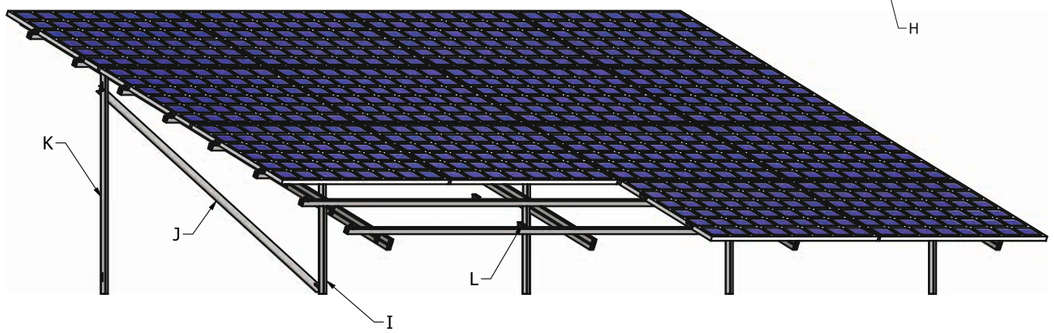

4

Photovoltaic construction components

SCREWS, NUTS, GROOVES

ALLEN KEY SCREW

CATALOGUE NO.	MARK X	MATERIAL
50816	16	A2
50820	20	A2
50825	25	A2
50830	30	A2

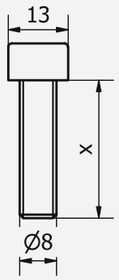

HEX SCREW

CATALOGUE NO.	DIMENSION	MATERIAL
501020	M10x20	A2
501030	M10x30	A2

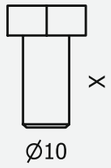

HEX SCREW

CATALOGUE NO.	DIMENSION	MATERIAL
500816	M8x16	A2
500820	M8x20	A2

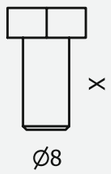

BI-METAL SELF-TAPPING SCREW WITH WASHER

CATALOGUE NO.	DIMENSION	MATERIAL
41100	6x25	A2

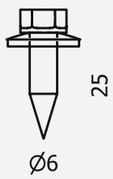

FLANGE NUT

CATALOGUE NO.	DIMENSION	MATERIAL
5010K	M10	A2
5008K	M8	A2

FLANGE NUT

CATALOGUE NO.	DIMENSION	MATERIAL
-	M10	A2

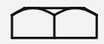

INLET WITH BALL

CATALOGUE NO.	DIMENSION	MATERIAL
50032	M8	Al

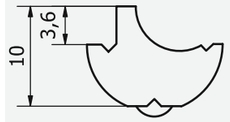

TCS CREW

CATALOGUE NO.	DIMENSION	MATERIAL
50860	8x60	A2
50880	8x80	A2

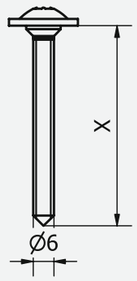

SOLAR SCREW

CATALOGUE NO.	DIMENSION	MATERIAL
50625	M10x25	A2
50630	M10x30	A2

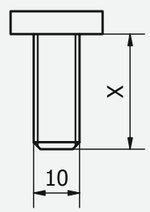

FURNITURE SCREW

CATALOGUE NO.	DIMENSION	MATERIAL
50725	M10x25	A2

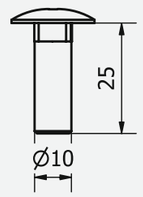

THREADED PLATE

CATALOGUE NO.	DIMENSION	MATERIAL
50033	M8	A2

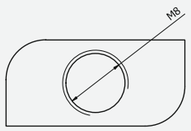

EARTHING PLATE

CATALOGUE NO.	DIMENSION	MATERIAL
70006	-	A2

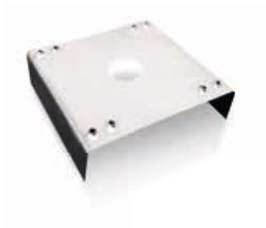

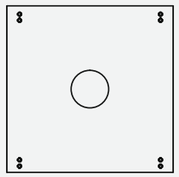

DUAL THREAD SCREW

CATALOGUE NO.	DIMENSION	MATERIAL
M10200	M10X200	A2
M10250	M10X250	A2
M10300	M10X300	A2
M12350	M12X350	A2

CORNER BRACKET FOR BALLAST

CATALOGUE NO.	DIMENSION	MATERIAL
60001	40x40	Al

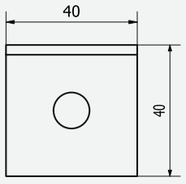

END CLAMP

NAME	Catalogue no.	Mark „X"	MATERIAL
END CLAMP	**10Z25/10Z25R**	25	Al
	10Z30/10Z30R	30	Al
	10Z32/10Z32R	32	Al
	10Z35/10Z35R	35	Al
	10Z38/10Z38R	38	Al
	10Z40/10Z40R	40	Al

R- marking of the clamp in black color
It is possible to prepare components for an individual order.

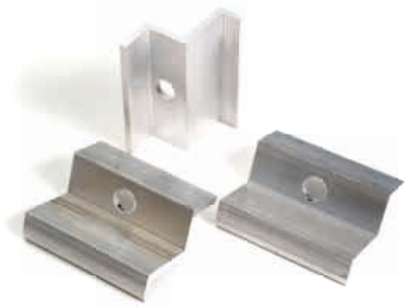

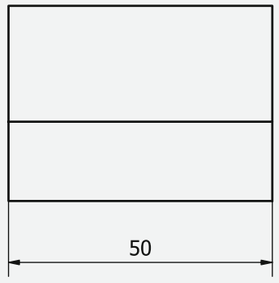

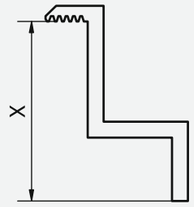

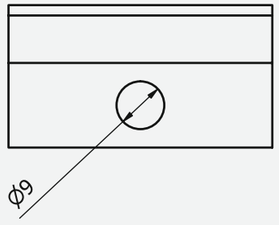

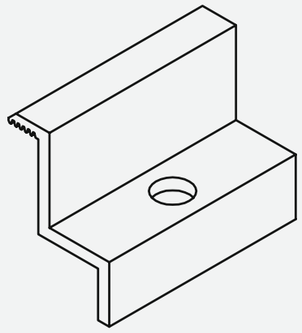

MIDDLE CLAMP

NAME	CATALOGUE NO.	DIMENSION	MATERIAL
MIDDLE CLAMP	**10U24/10U24R**	24x50	Al

R- marking of the clamp in black color
It is possible to prepare components for an individual order.

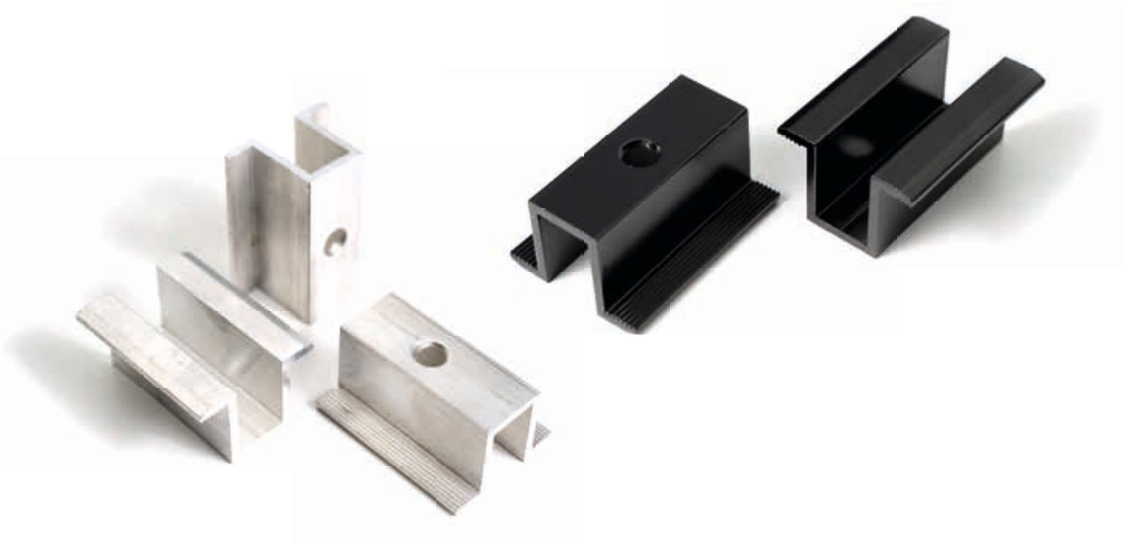

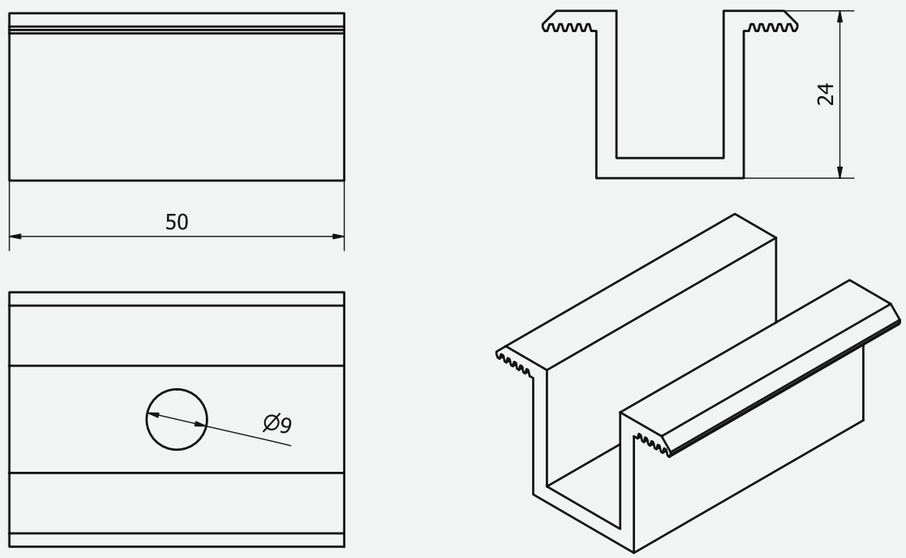

RUST-PROOF ADAPTER

NAME	CATALOGUE NO.	MATERIAL
RUST-PROOF ADAPTER	**50082**	A2

It is possible to prepare components for an individual order.

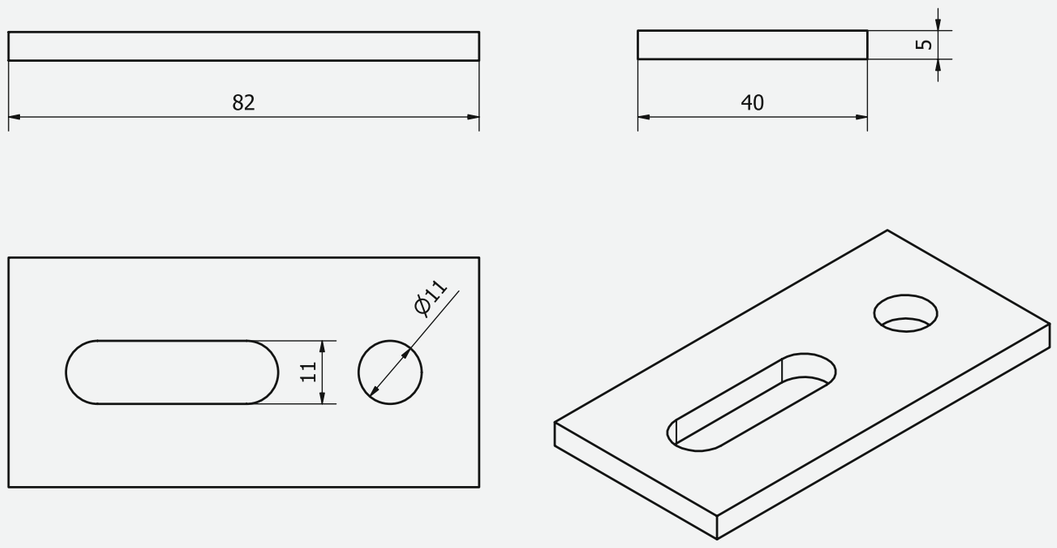

DOUBLY ADJUSTABLE RAFTER HOOK

NAME	CATALOGUE NO.	MATERIAL
MOUNTING HOOK (ADJUSTABLE)	**20171**	A2

It is possible to prepare components for an individual order.

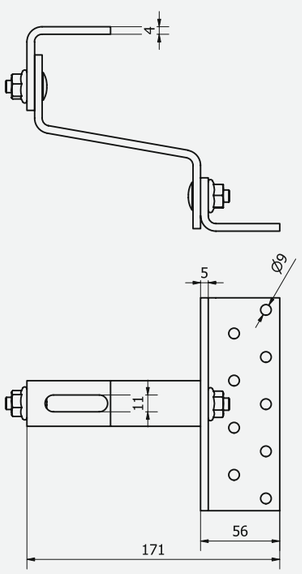

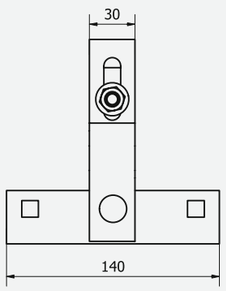

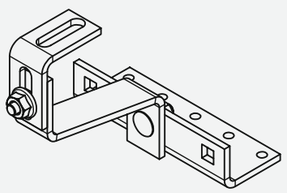

L-SHAPED HOOK

NAME	CATALOGUE NO.	MATERIAL
L-SHAPED HOOK	**20255**	A2

It is possible to prepare components for an individual order.

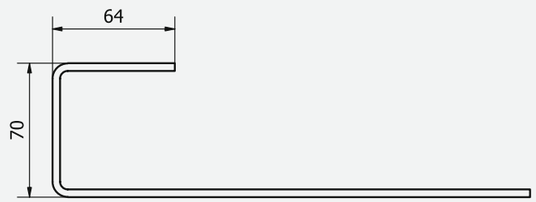

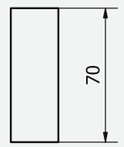

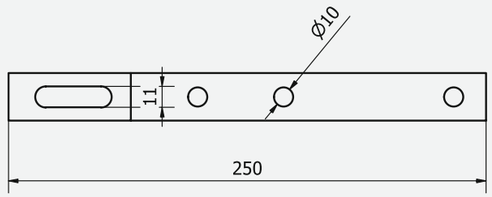

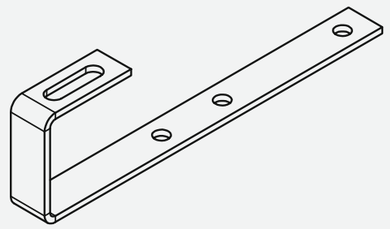

L-SHAPED HOOK ADJUSTABLE

NAME	CATALOGUE NO.	MATERIAL
L-SHAPED HOOK (ADJUSTABLE)	**20255R**	A2

It is possible to prepare components for an individual order.

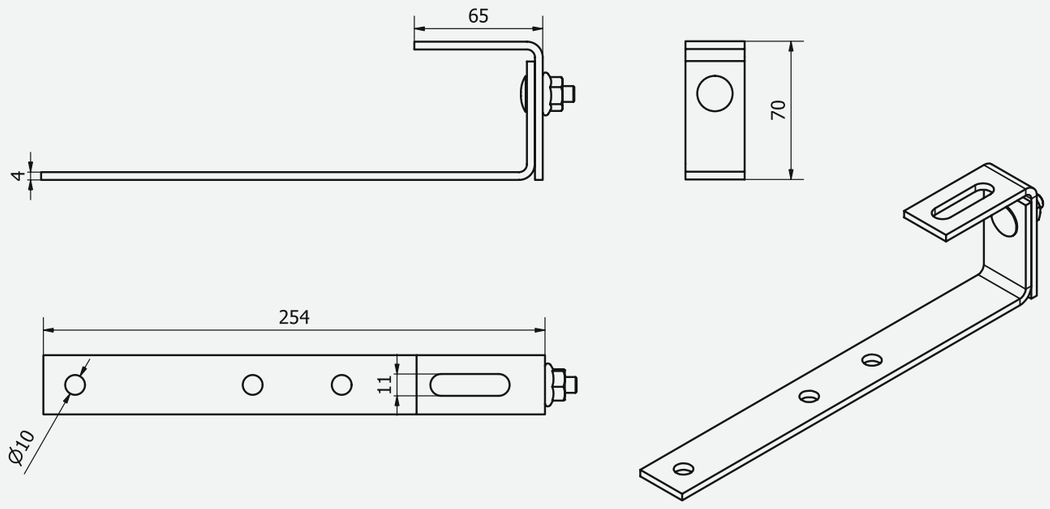

ZL-SHAPED HOOK

NAME	CATALOGUE NO.	MATERIAL
ZL-SHAPED HOOK	**20310**	A2

It is possible to prepare components for an individual order.

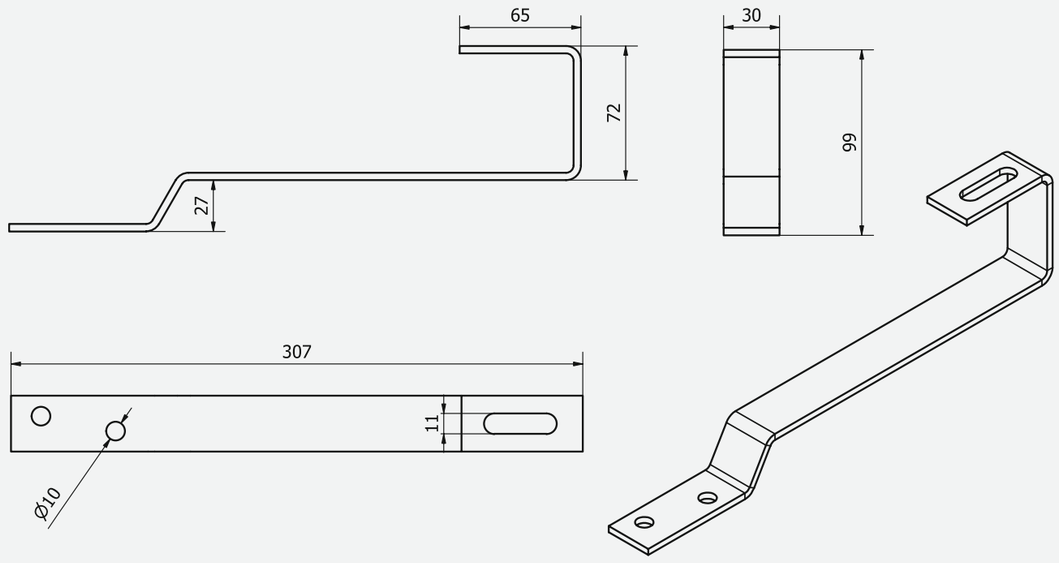

ZL-SHAPED HOOK ADJUSTABLE

NAME	CATALOGUE NO.	MATERIAL
ZL-SHAPED HOOK (ADJUSTABLE)	**20310R**	A2

It is possible to prepare components for an individual order.

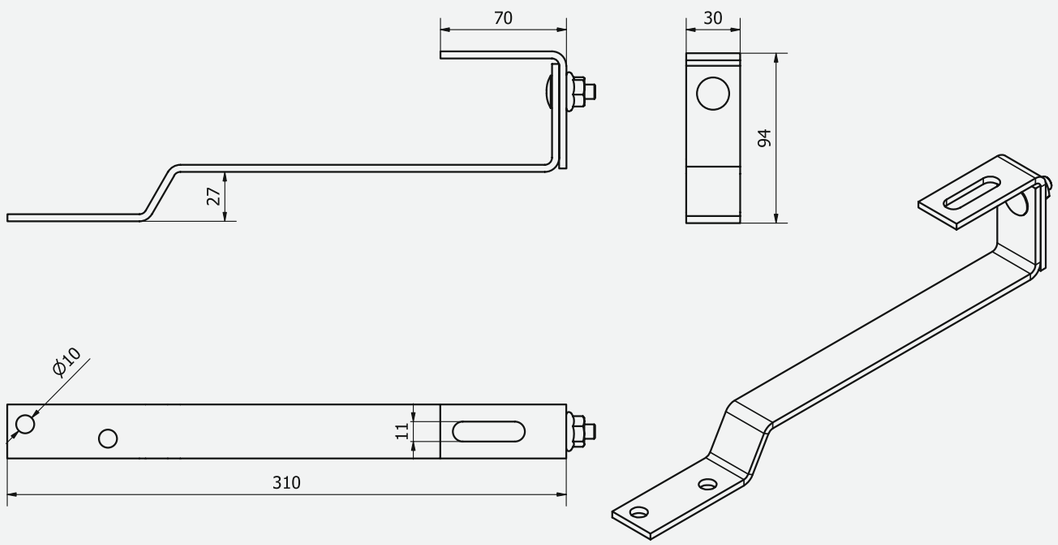

S-SHAPED HOOK

NAME	CATALOGUE NO.	MATERIAL
S-SHAPED HOOK 466MM	**20466**	A2
S-SHAPED HOOK 466MM REG	**20466R**	A2
S-SHAPED HOOK 506MM	**20506**	A2
S-SHAPED HOOK 506MM REG	**20506R**	A2
S-SHAPED HOOK 520MM REG	**20520R**	A2
S-SHAPED HOOK 610MM REG	**20610R**	A2

It is possible to prepare components for an individual order.

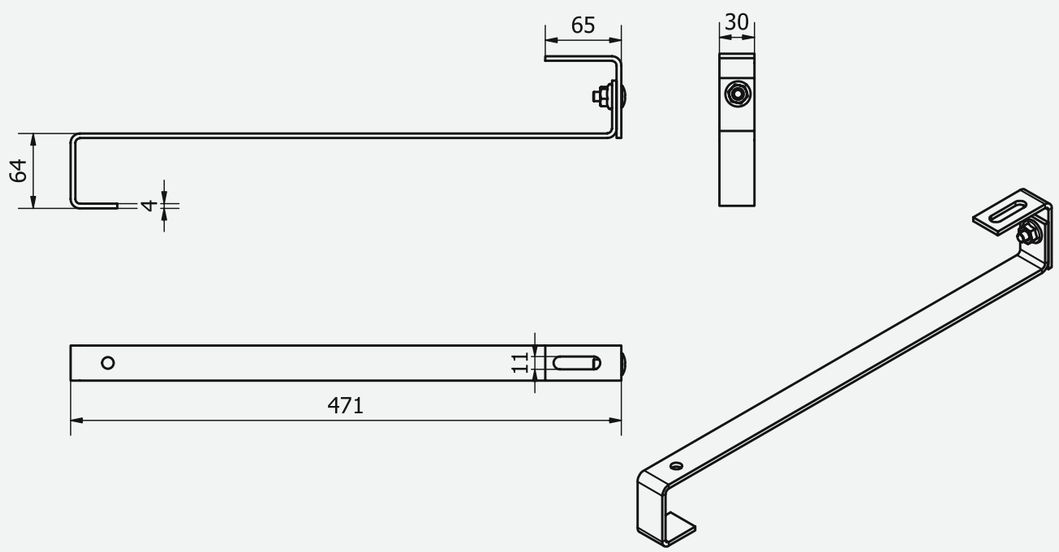

40X40 MM MOUNTING PROFILE

NAME	CATALOGUE NO.	DIMENSION	MATERIAL
40X40 MM MOUNTING PROFILE	**34220**	40x40x2200	Al
	34330	40x40x3300	Al
	34440	40x40x4400	Al
	34660	40x40x6600	Al
	34220R	40x40x2200	Al

It is possible to prepare components for an individual order.

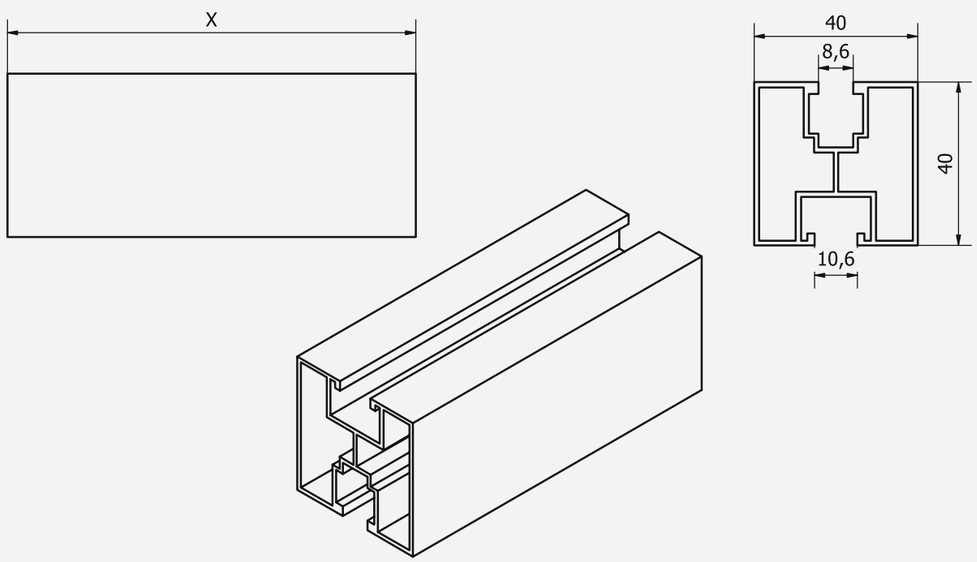

TRAPEZOIDAL RAIL LIFT

NAME	CATALOGUE NO.	DIMENSION X/Y/Z	MATERIAL
TRAPEZOIDAL LOW RAIL LIFT	**43330**	31x100x300	Al + Pe
	43470	31x100x470	Al + Pe
TRAPEZOIDAL HIGH RAIL LIFT	**46330**	60x114x330	Al + Pe
	46470	60x114x470	Al + Pe

It is possible to prepare components for an individual order.

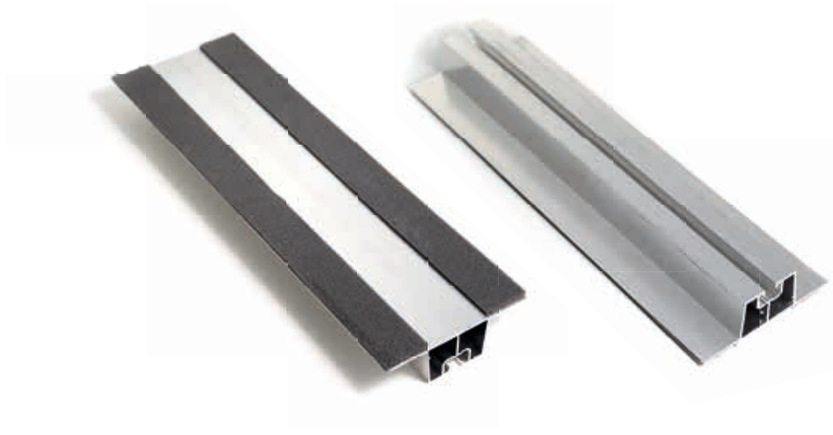

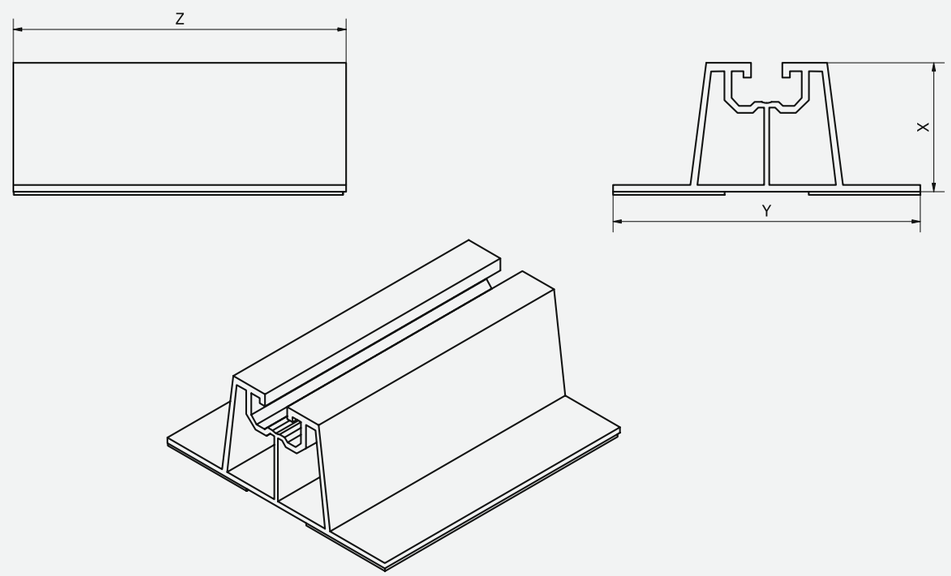

C120 CONNECTOR

NAME	CATALOGUE NO.	MATERIAL
CONNECTOR	**50120**	Al
BLACK CONNECTOR	**50120R**	Al

It is possible to prepare components for an individual order.

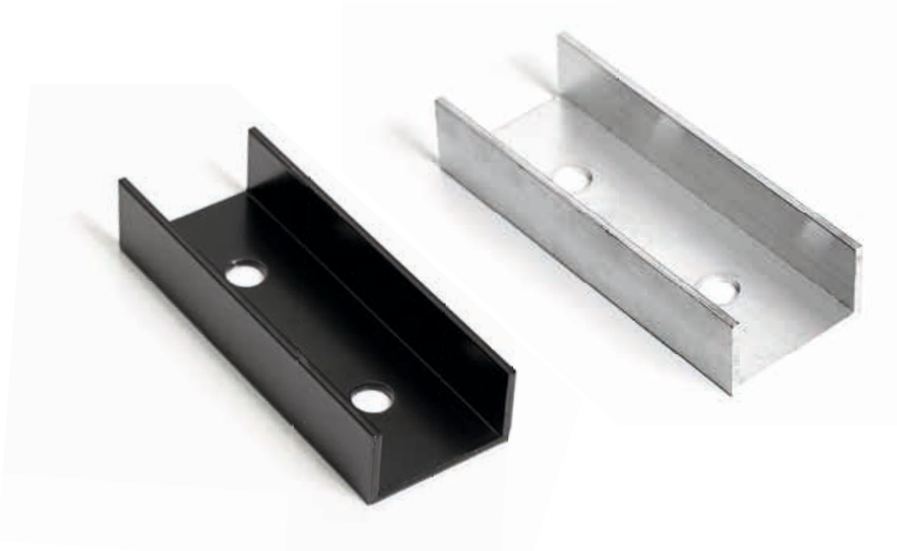

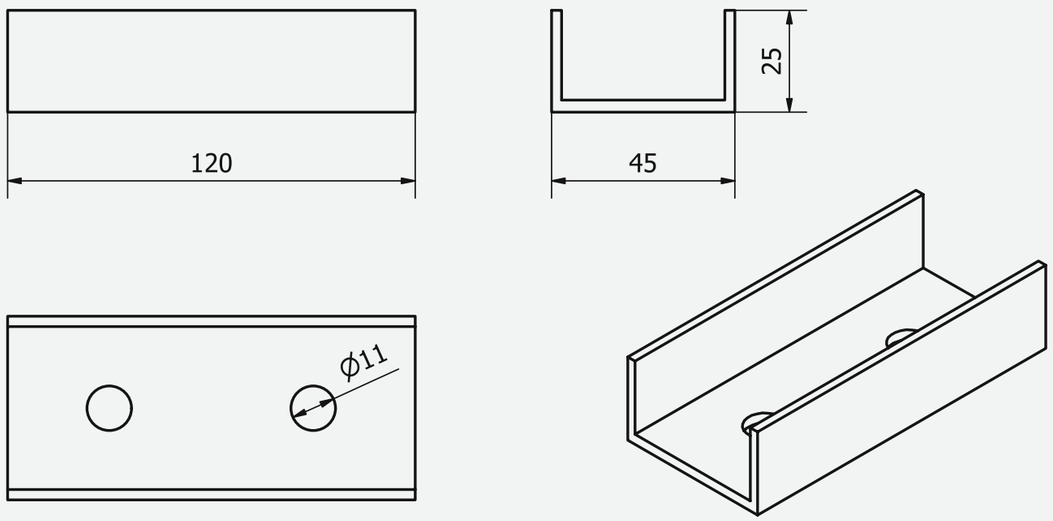

LARGE SCREW-ON TRIANGLE WIND ZONE I

NAME	NR KATALOGOWY	NACHYLENIE „A"	B	C	D	E	MATERIAL
LARGE TRIANGLE	**60165-15**	15 degrees	449	1595	247	854	Al+A2
	60165-20	20 degrees	584	1552	325	877	Al+A2
	60165-25	25 degrees	715	1498	408	909	Al+A2
	60165-30	30 degrees	840	1433	498	950	Al+A2
	60165-35	35 degrees	959	1357	597	1004	Al+A2

It is possible to prepare components for an individual order.

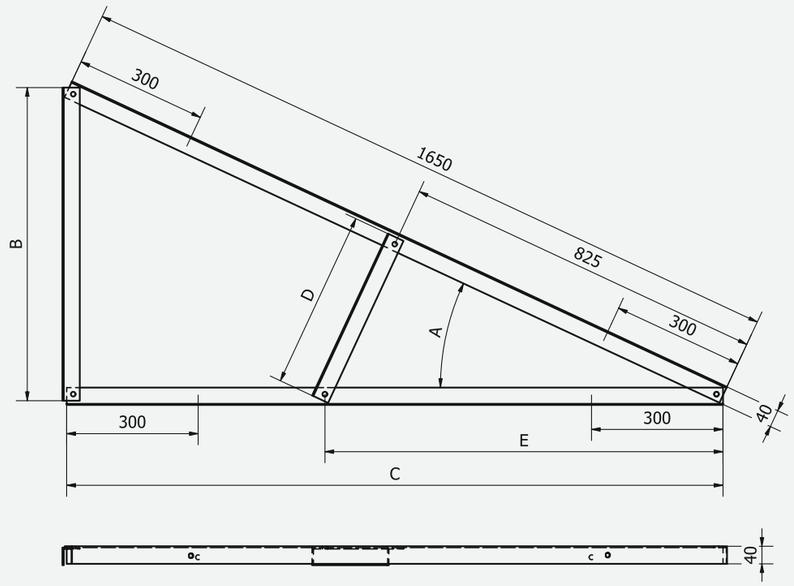

SMALL SCREW-ON TRIANGLE

NAME	CATALOGUE NO.	NACHYLENIE	B	C	MATERIAL
SMALL TRIANGLE*	**60096-15**	15 degrees	271	928	Al+A2
	60096-20	20 degrees	348	904	Al+A2
	60096-25	25 degrees	423	873	Al+A2
	60096-30	30 degrees	495	835	Al+A2
	60096-35	35 degrees	563	792	Al+A2

It is possible to prepare components for an individual order.

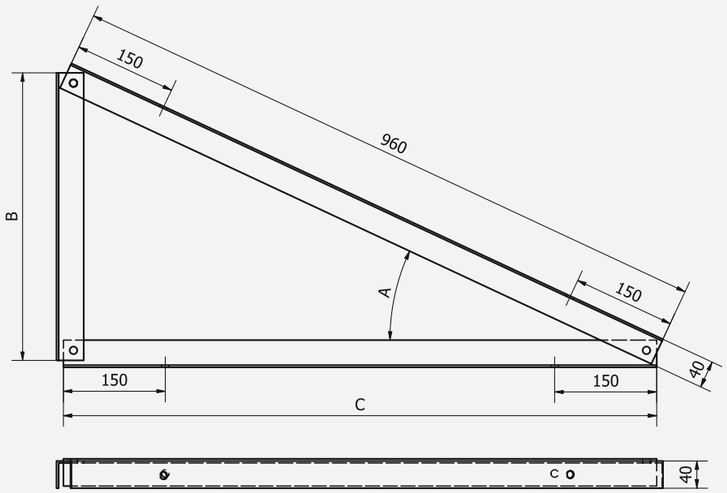

ANGLE BAR WITH HOLES

NAME	CATALOGUE NO.	MATERIAL
ANGLE BAR WITH HOLES	**60118**	Al

It is possible to prepare components for an individual order.

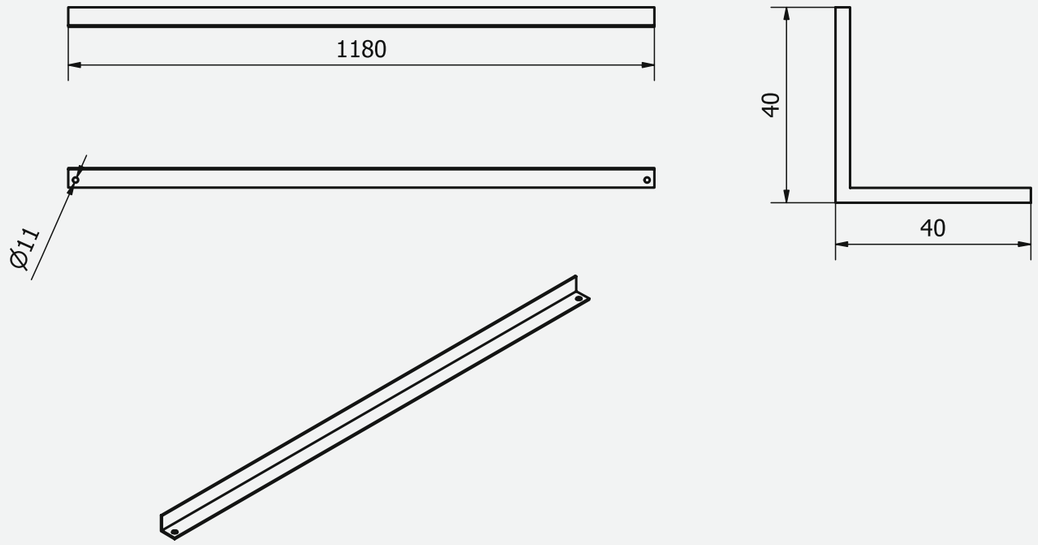

PLATE MOUNTED UNDER ROOFING FELT/MEMBRANE

NAME	CATALOGUE NO.	MATERIAL
PLATE MOUNTED UNDER ROOFING FELT/ MEMBRANE	**20400**	Galvanized steel/ varnished

It is possible to prepare components for an individual order.

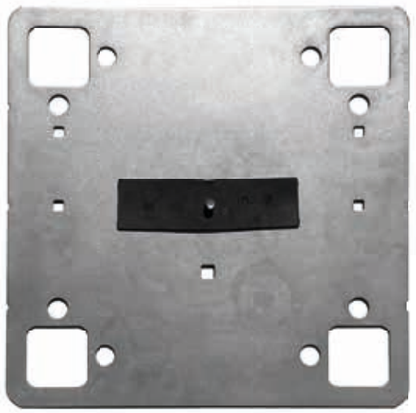

Coverage of membranes PVC, FPO, PVC gr. min. 2mm (-5% / +10%)

Requirements for the membrane
Tensile strength min. 900N/5 mm PN-EN 12311-2
Tear strength min. 150N PN-EN 12310-2
Shear strength at joints min. 500N/50mm PN-EN 12317-2
Peel strength on connections min. 150N/50mm PN-EN 12316-2”

Requirements for roofing felt
Longitudinal and transverse tensile strength min. 300N/50 mm PN-EN 12311-1
Tear strength min. 150N PN-EN 12310-1
Shear strength at longitudinal and transverse joints min. 500N/50 mm PN-EN 12317-1
Peel strength min. 125N/50mm PN-EN 12316-1

Stone wool roof insulation
Allowable compressive stress at 10% deformation CS(10) for compressive force up to 5kN min. 30kPa EN 826
Allowable compressive stress at 10% deformation CS(10) for compressive force up to 12kN min. 70kPa PN-EN 826

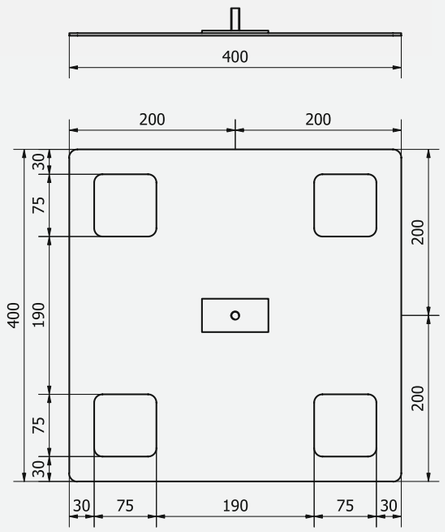

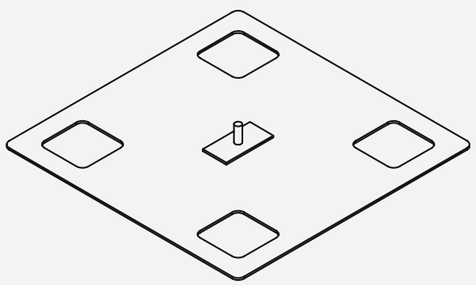

PROFILE FOR BALLAST STRUCTURE

NAME	CATALOGUE NO.	DIMENSION	MATERIAL
TRAPEZOIDAL RAIL LIFT	**441000**	40x114x1000	Al
TRAPEZOIDAL RAIL LIFT	**442000**	40x114x2000	Al

It is possible to prepare components for an individual order.

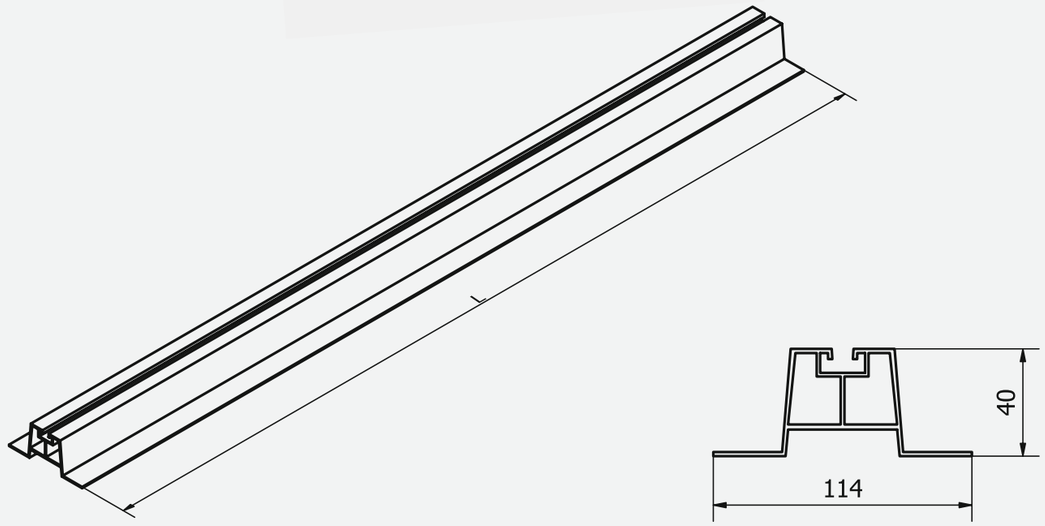

RUBBER PAD UNDER THE BALLAST

NAME	CATALOGUE NO.	DIMENSION	MATERIAL
RUBBER PAD UNDER THE BALLAST	**12110**	1700x300x1	Gum
RUBBER PAD UNDER THE BALLAST	**12111**	2300x300x1	Gum

It is possible to prepare components for an individual order.

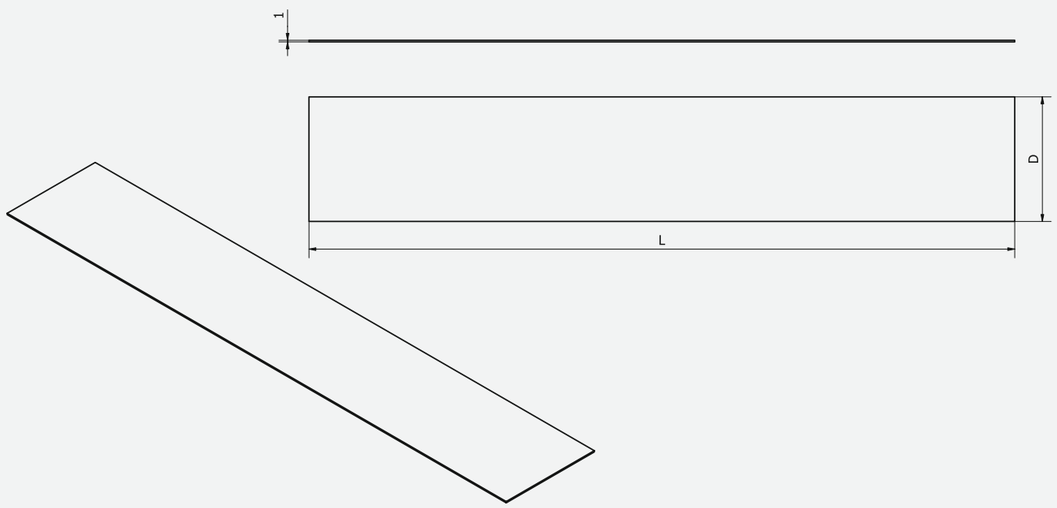

RUBBER PAD UNDER THE PROFILE

NAME	CATALOGUE NO.	DIMENSION	MATERIAL
RUBBER PAD UNDER THE PROFILE	**12120**	150x150x4	Gum

It is possible to prepare components for an individual order.

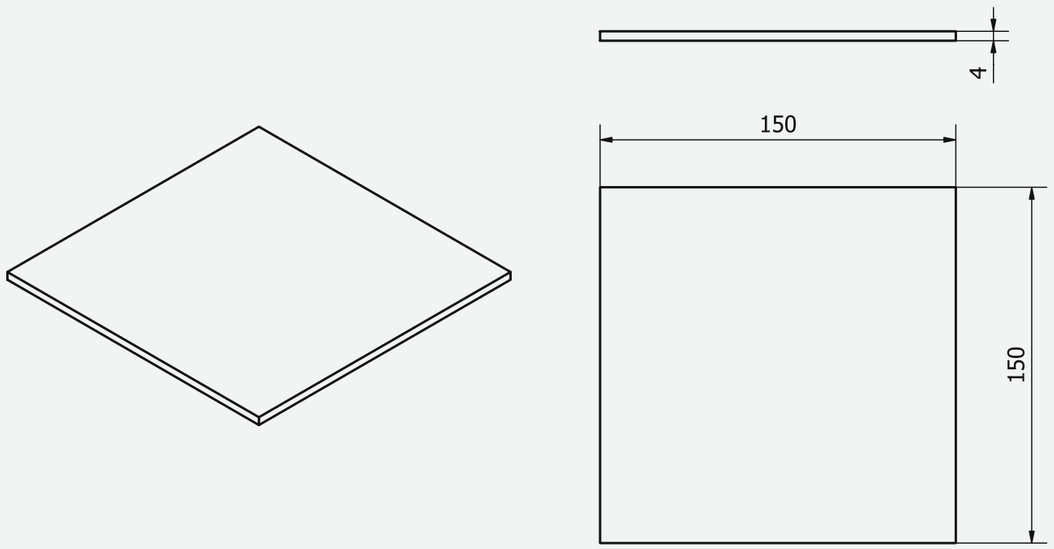

SHEET FOR BALLAST STRUCTURE

NAME	CATALOGUE NO.	X	Y	Z	MATERIAL
SHEET FOR BALLAST STRUCTURE	**20012**	1755	90	32	Al
	20015	2305	100	42	Al

It is possible to prepare components for an individual order.

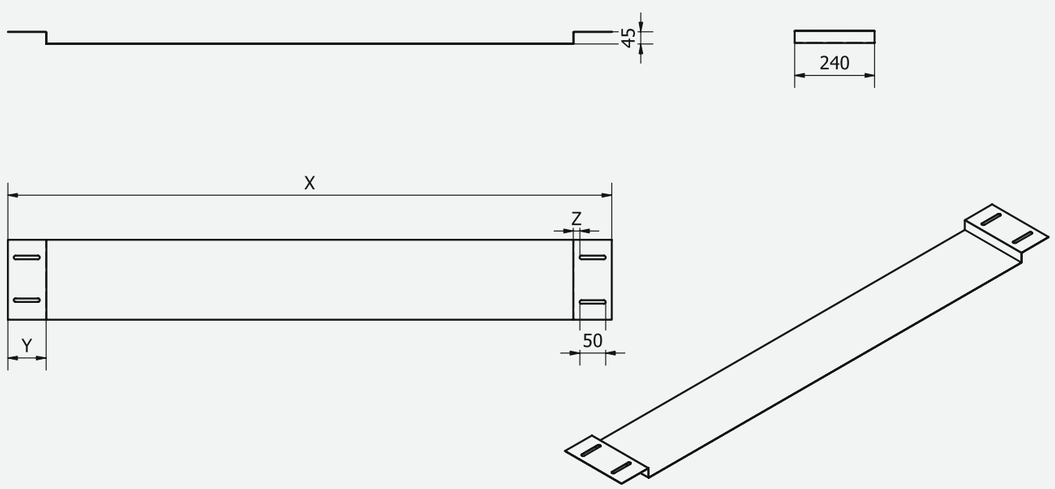

FRONT SUPPORT FOR BALLAST CONSTRUCTION

NAME	CATALOGUE NO.	MATERIAL
FRONT SUPPORT FOR BALLAST CONSTRUCTION	**20013**	Al

It is possible to prepare components for an individual order.

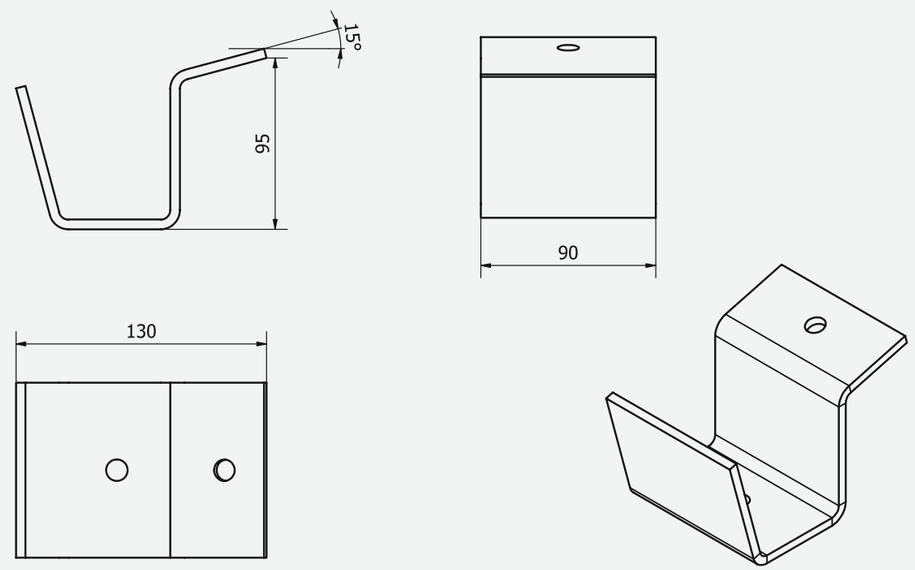

BACK MOUNTING BRACKET

NAME	CATALOGUE NO.	MATERIAL
BACK MOUNTING BRACKET	**20014**	Al

It is possible to prepare components for an individual order.

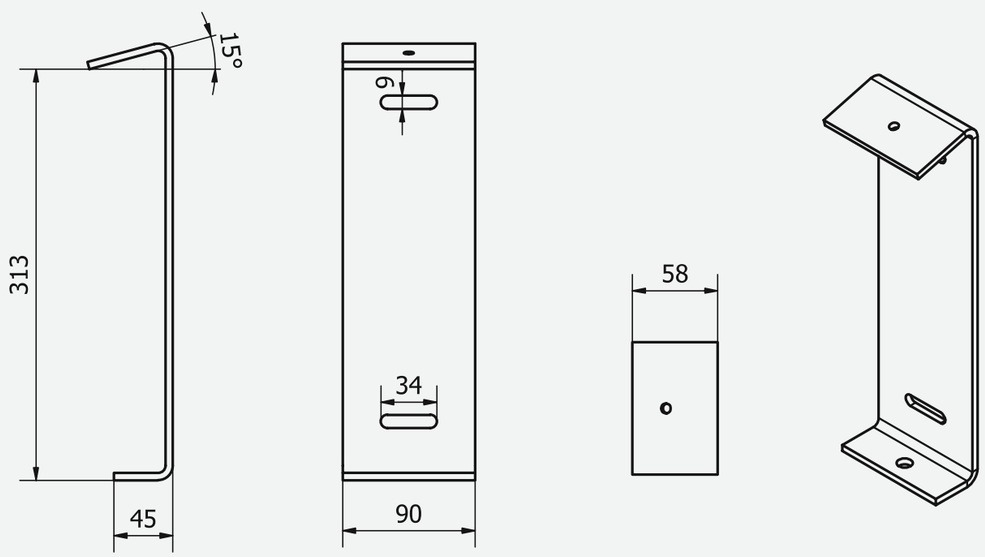

BACK MOUNTING BRACKET EAST/WEST

NAME	CATALOGUE NO.	MATERIAL
BACK MOUNTING BRACKET EAST/WEST	**20014WZ**	Al

It is possible to prepare components for an individual order.

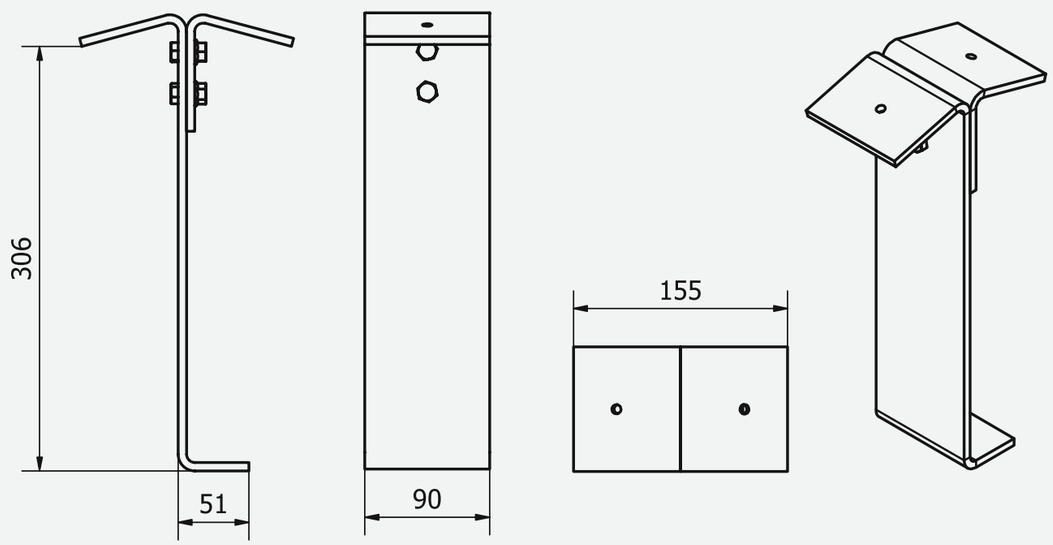

GROUND STRUT

NAME	CATALOGUE NO.	MATERIAL
GROUND STRUT	**80250**	Galvanized steel

It is possible to prepare components for an individual order.

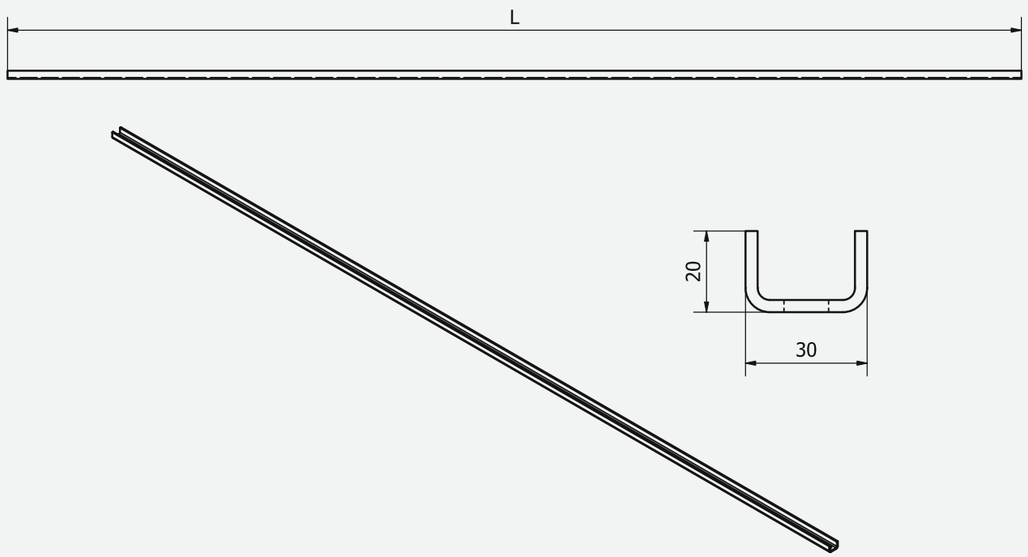

SMALL HAMMER-IN BRACKET

NAME	CATALOGUE NO.	MATERIAL
SMALL HAMMER-IN BRACKET	**80200**	Galvanized steel

It is possible to prepare components for an individual order.

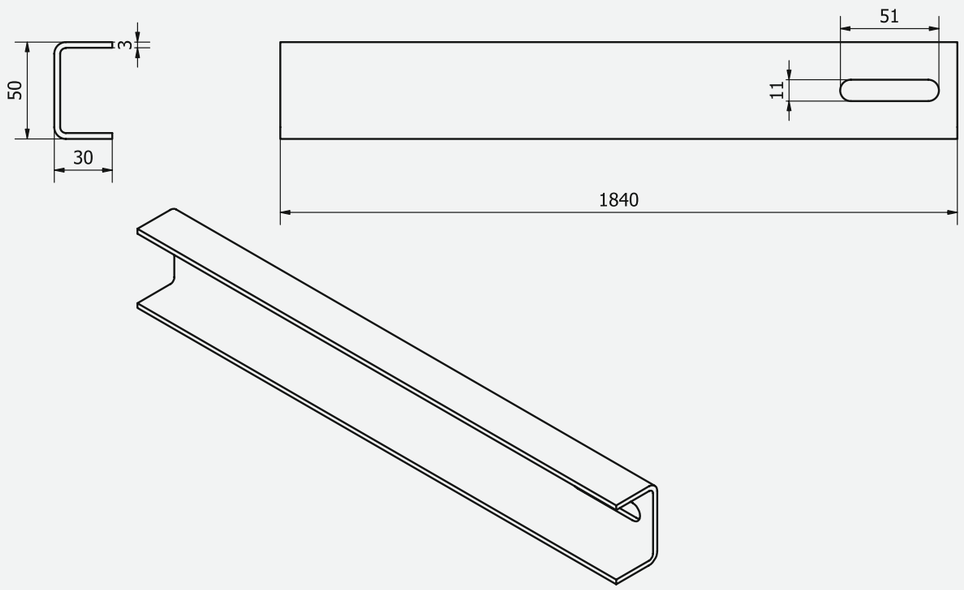

LARGE DRIVEN BRACKET

NAME	CATALOGUE NO.	MATERIAL
LARGE DRIVEN BRACKET	**80300**	Galvanized steel

It is possible to prepare components for an individual order.

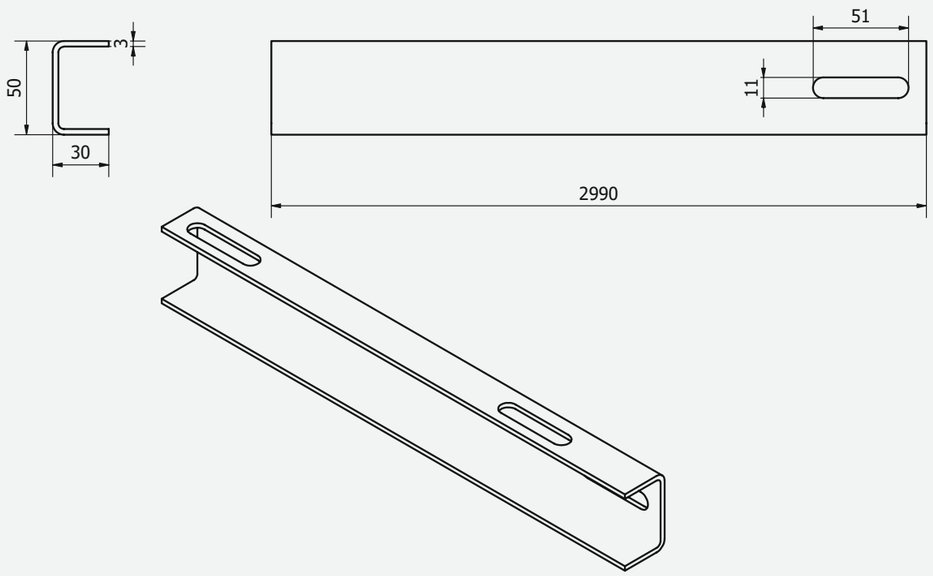

STRENGTHENED PROFILE 80X40

NAME	CATALOGUE NO.	DIMENSION	MATERIAL
STRENGTHENED PROFILE	**382900**	80x40x2900	Al
	387000	80x40x3700	Al

It is possible to prepare components for an individual order.

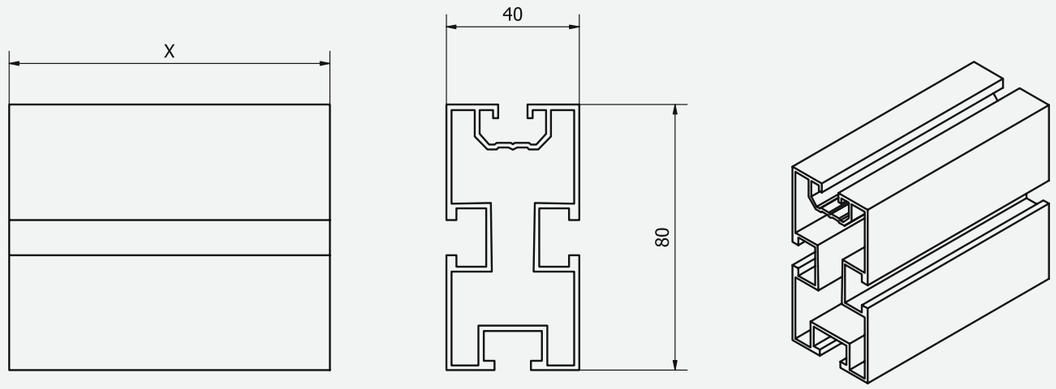

MALLET SDS MAX

NAME	CATALOGUE NO.	MATERIAL
MALLET SDS MAX	**70005**	HR

It is possible to prepare components for an individual order.

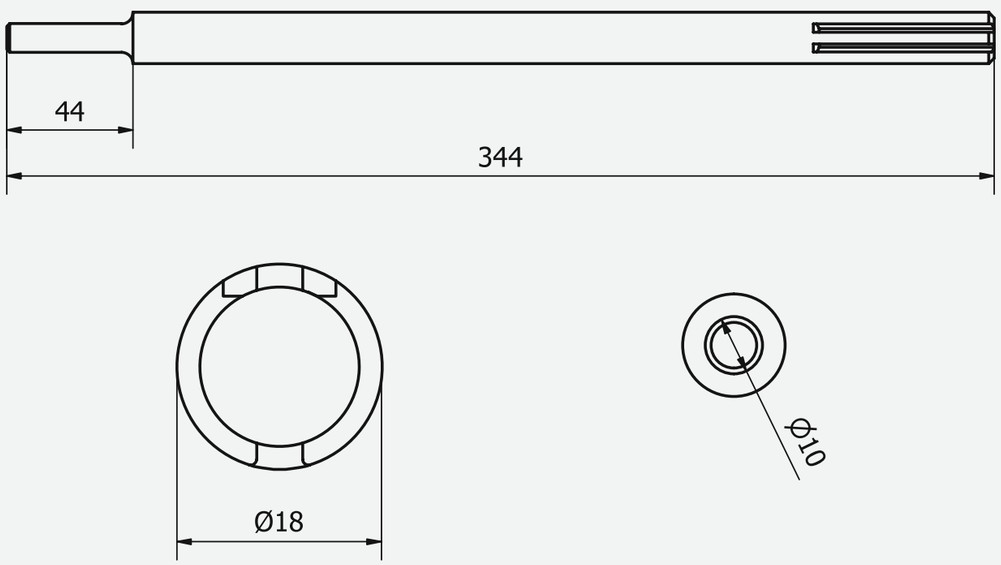

EARTH CONNECTION

NAME	CATALOGUE NO.	DIMENSION	MATERIAL
EARTH CONNECTION	**70003**	70x70	Galvanized steel
EARTH CONNECTION THREE PLATES	**70004**	70x70	Galvanized steel

It is possible to prepare components for an individual order.

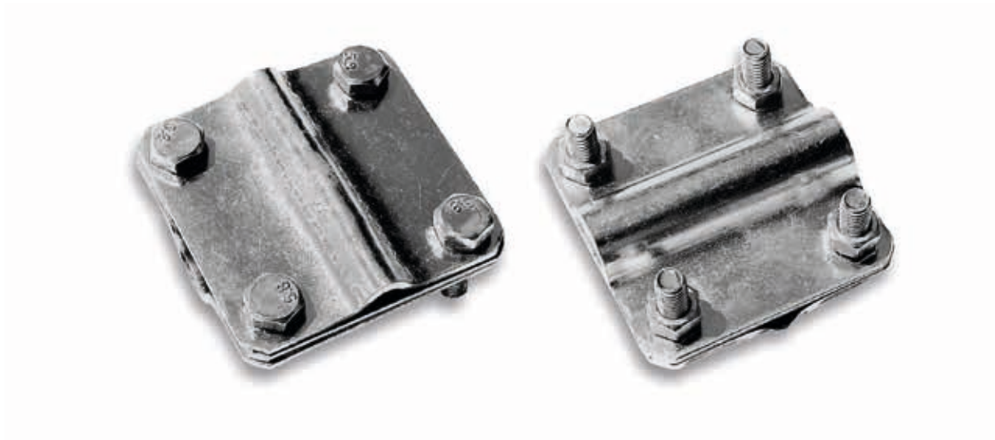

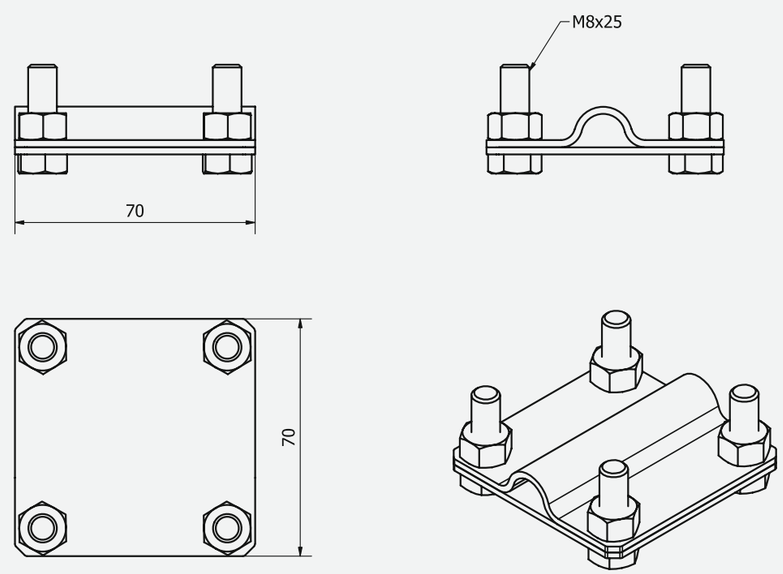

GALVANIZED EARTH ELECTRODE

NAME	CATALOGUE NO.	MATERIAL
GALVANIZED EARTH ELECTRODE	**70001**	Galvanized steel

It is possible to prepare components for an individual order.

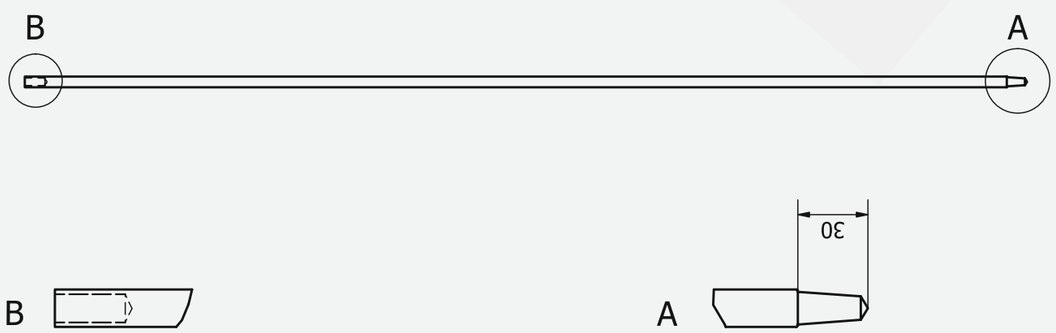

5

Car port

CAR PORT – CONCEPTS

NOTES

EL-SUN

SYSTEMY MONTAŻOWE
FOTOWOLTAIKA

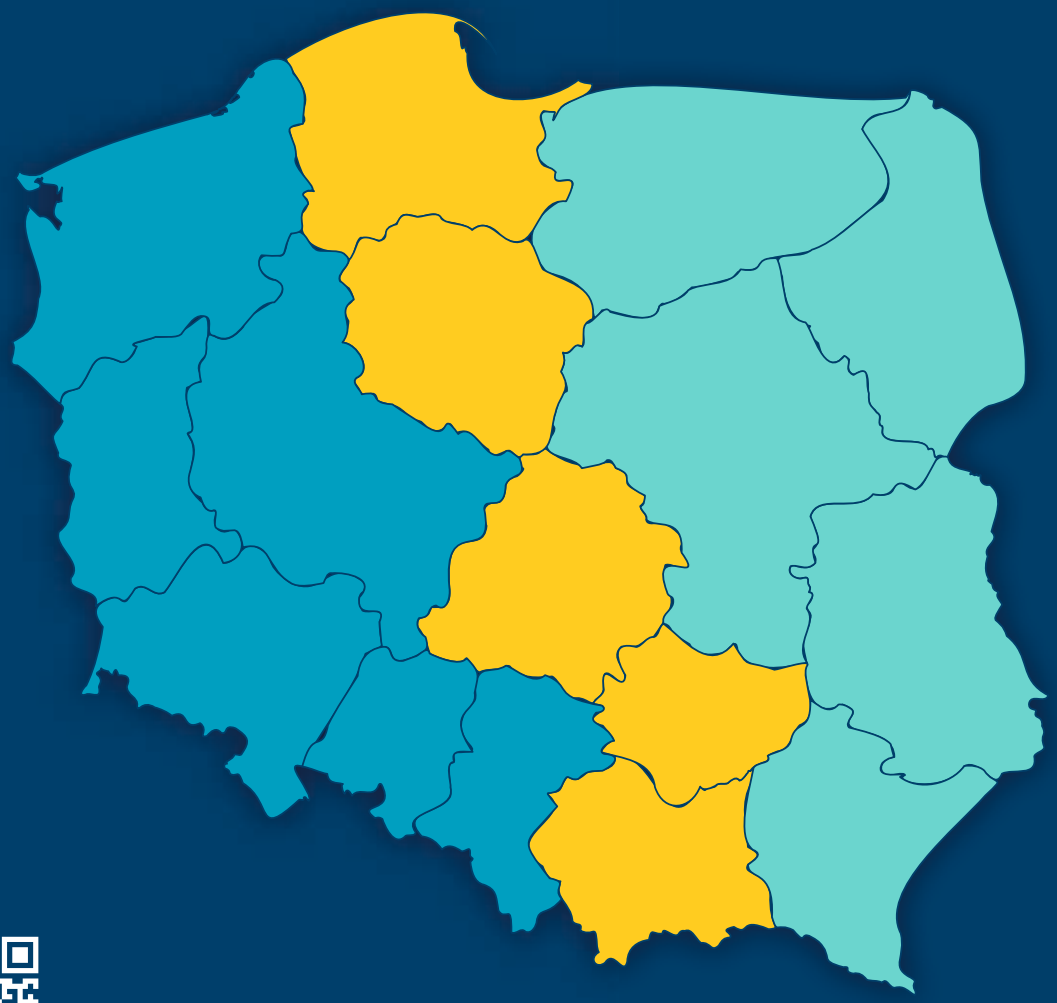

www.el-sun.pl
+ 48 794 723 274
biuro@el-sun.pl
www.facebook.com/elsunkrakow

Nad Serafą 49
30-864 Kraków

NIP: 8631703399
REGON: 383468137

Przedstawiciele:

Manager ds. Exportu
+48 577 439 002
export@el-sun.pl

Manager regionu
+ 48 792 783 867

Manager regionu
+ 48 794 649 505

Manager regionu
+ 48 577 439 646